CMT-NEZ3/NEZ5

SERVICE MANUAL

Ver. 1.0 2005.03

US Model
Australian Model
CMT-CNEZ3
Canadian Model
AEP Model
UK Model
E Model
CMT-CNEZ3/CNEZ5

- CMT-NEZ3/NEZ5 are composed of the following models.
  As service manuals are issued for each component model, please refer to them.

COMPONENT MODEL NAME

	CMT-NEZ3	CMT-NEZ5
Compact Disc Deck Receiver	HCD-NEZ3	HCD-NEZ5
Speaker System	SS-CNEZ3	SS-CNEZ5

SPECIFICATIONS

Power requirements
North American model: AC 120 V, 60 Hz
Mexican model: AC 120 V, 60 Hz
European model: AC 230 V, 50/60 Hz
Australian model: AC 230 – 240 V, 50/60 Hz
Korean model: AC 220 V, 60 Hz
Chinese model: AC 220 V, 50/60 Hz
Taiwanese model: AC 120 V, 50/60 Hz
Argentine model AC 220 V, 50/60 Hz
Saudi Arabian model: AC 120 – 127, 220, 230 – 240 V, 50/60 Hz
Other models: AC 120, 220 or 230 – 240 V, 50/60 Hz
Adjustable with voltage selector

Power consumption
CMT-NEZ5
European model: 60 W
0.3 W (in Power Saving Mode)
Other models: 50 W

CMT-NEZ3
North American model: 40 W
European model: 45 W
0.3 W (in Power Saving Mode)
Other models: 45 W

Dimensions (w/h/d) (excl. speakers)
Approx. 164 × 235 × 265mm

Mass (excl. speakers)
CMT-NEZ5: Approx. 3.6 kg
CMT-NEZ3
North American model: Approx. 2.8 kg
Other models: Approx. 3.6 kg

Supplied accessories Remote Commander (1)
R6 (size AA) batteries (2)
AM loop antenna (1)
FM lead antenna (1)

Design and specifications are subject to change without notice.

ACCESSORIES

Part No.	Description	Remark
1-754-102-31	ANTENNA, LOOP (LW.MW)	
1-754-243-11	ANTENNA (FM)	
2-055-382-01	BATTERY COVER (for RM-SC30)	
2-582-894-11	MANUAL, INSTRUCTION (ENGLISH) (US, CND, AEP, UK, E, TW, AR, SP, EA, E51, AUS)	
2-582-894-21	MANUAL, INSTRUCTION (FRENCH) (CND, AEP, E, SP, EA)	
2-582-894-31	MANUAL, INSTRUCTION (SPANISH) (AEP, E, AR, MX, SP, E51)	
2-582-894-41	MANUAL, INSTRUCTION (GERMAN, DUTCH) (AEP)	
2-582-894-51	MANUAL, INSTRUCTION (ITALIAN, PORTUGUESE) (AEP)	
2-582-894-61	MANUAL, INSTRUCTION (SWEDISH, DANISH, FINNISH) (EE, RU)	
2-582-894-71	MANUAL, INSTRUCTION (POLISH, CZECH, HUNGARIAN) (EE, RU)	
2-582-894-81	MANUAL, INSTRUCTION (GREEK, RUSSIAN) (EE, RU)	
2-582-894-91	MANUAL, INSTRUCTION (ARABIC) (EA)	
2-582-896-11	MANUAL, INSTRUCTION (TRADITIONAL CHINESE) (TW, SP)	
2-582-896-21	MANUAL, INSTRUCTION (KOREAN) (KR)	
A-1108-432-A	OVERALL ASSY (RM-SC30)	

- Abbreviation
  AR : Argentina model
  AUS : Australian model
  CND : Canadian model
  E51 : Chirean and Peruvian models
  EA : Saudi Arabia model
  EE : East European model
  KR : Korean model
  MX : Mexican model
  RU : Russian model
  SP : Singapore model
  TW : Taiwan model

MICRO HI-FI COMPONENT SYSTEM

9-879-530-01
2005C05-1
© 2005.03

Sony Corporation
Personal Audio Group
Published by Sony Engineering Corporation

SONY®

REVISION HISTORY

Clicking the version allows you to jump to the revised page.
Also, clicking the version at the upper right on the revised page allows you to jump to the next revised page.

Ver.	Date	Description of Revision
1.0	2005.03	New

HCD-NEZ3/NEZ5

SERVICE MANUAL

Ver. 1.3 2005.11

US Model
Australian Model
HCD-NEZ3
Canadian Model
AEP Model
UK Model
E Model
HCD-NEZ3/NEZ5

Photo: HCD-NEZ5

- HCD-NEZ3 is the amplifier, CD player, tape deck and tuner section in CMT-NEZ3.
- HCD-NEZ5 is the amplifier, CD player, tape deck and tuner section in CMT-NEZ5.

CD Section	Model Name Using Similar Mechanism	NEW
	Base Unit Name	BU-K7BD81D2 or BU-K8BD83S-WOD
	Optical Pick-up Name	KSM-213EDP or KSM-213CDP
TAPE Section	Model Name Using Similar Mechanism	NEW
	Tape Transport Mechanism Type	CMAL5Z231

SPECIFICATIONS

Main unit

AUDIO POWER SPECIFICATIONS

POWER OUTPUT AND TOTAL HARMONIC DISTORTION:
(The United States model only)

CMT-NEZ5

With 6 ohm loads, both channels driven, from 120 – 10,000 Hz; rated 18 watts per channel minimum RMS power, with no more than 10% total harmonic distortion from 250 milliwatts to rated output.

CMT-NEZ3

With 6 ohm loads, both channels driven, from 120 – 10,000 Hz; rated 9 watts per channel minimum RMS power, with no more than 10% total harmonic distortion from 250 milliwatts to rated output.

Amplifier section

CMT-NEZ5

European model:
DIN power output (rated): 18 + 18 W (6 ohms at 1 kHz, DIN)
Continuous RMS power output (reference): 25 + 25W (6 ohms at 1 kHz, 10% THD)
Music power output (reference): 38 + 38 W

Pan-American model:
Continuous RMS power output (reference): 20 + 20 W (6 ohms at 1 kHz, 10% THD)

Other models:
The following measured at AC 120, 220 or 240 V, 50/60 Hz
DIN power output (rated): 14 + 14 W (6 ohms at 1 kHz, DIN)
Continuous RMS power output (reference): 20 + 20 W (6 ohms at 1 kHz, 10% THD)

Inputs
AUDIO IN: Sensitivity 250 mV, impedance 47 kilohms

Outputs
PHONES: Accepts headphones with an impedance of 8 ohms or more
SPEAKER: Accepts impedance of 6 to 16 ohms.

CMT-NEZ3

North-American model:
Continuous RMS power output (reference): 10 + 10 W (6 ohms at 1 kHz, 10% THD)

European model:
DIN power output (rated): 11 + 11 W (6 ohms at 1 kHz, DIN)
Continuous RMS power output (reference): 15 + 15 W (6 ohms at 1 kHz, 10% THD)
Music power output (reference): 28 + 28 W

Other models:
The following measured at AC 120, 220 or 240 V, 50/60 Hz
DIN power output (rated): 11 + 11 W (6 ohms at 1 kHz, DIN)
Continuous RMS power output (reference): 15 + 15 W (6 ohms at 1 kHz, 10% THD)

Inputs
AUDIO IN: Sensitivity 250 mV, impedance 47 kilohms

Outputs
PHONES: Accepts headphones with an impedance of 8 ohms or more
SPEAKER: Accepts impedance of 6 to 16 ohms.

– Continued on next page –

COMPACT DISC DECK RECEIVER

9-879-528-04
2005K05-1
© 2005.11

Sony Corporation
Personal Audio Division
Published by Sony Engineering Corporation

SONY®

CD player section

Laser Diode Properties	Emission duration: continuous Laser Output: Less than 44.6 µW (This output is the value measurement at a distance of 200 mm from the objective lens surface on the Optical Pick-up Block with 7 mm aperture)
Frequency response	20 Hz – 20 kHz

Tape deck section

Recording system	4-track 2-channel, stereo

Tuner section

FM stereo, FM/AM superheterodyne tuner

FM tuner section

Tuning range	87.5 – 108.0 MHz
Antenna	FM lead antenna
Antenna terminals	75 ohms unbalanced
Intermediate frequency	10.7 MHz

AM tuner section

Tuning range	
Pan-American model:	530 – 1,710 kHz (with the tuning interval set at 10 kHz) 531 – 1,710 kHz (with the tuning interval set at 9 kHz)
European model:	531 – 1,602 kHz (with the tuning interval set at 9 kHz)
Other models:	530 – 1,710 kHz (with the tuning interval set at 10 kHz) 531 – 1,602 kHz (with the tuning interval set at 9 kHz)
Antenna	AM loop antenna, external antenna terminal
Intermediate frequency	450 kHz

General

Power requirements	
North American model:	AC 120 V, 60 Hz
Mexican model:	AC 120 V, 60 Hz
European model:	AC 230 V, 50/60 Hz
Australian model:	AC 230 – 240 V, 50/60 Hz
Korean model:	AC 220 V, 60 Hz
Chinese model:	AC 220 V, 50/60 Hz
Taiwanese model:	AC 120 V, 50/60 Hz
Argentine model	AC 220 V, 50/60 Hz
Saudi Arabian model:	AC 120 – 127, 220, 230 – 240 V, 50/60 Hz
Other models:	AC 120, 220 or 230 – 240 V, 50/60 Hz Adjustable with voltage selector
Power consumption	
CMT-NEZ5	
European model:	60 W 0.3 W (in Power Saving Mode)
Other models:	50 W
CMT-NEZ3	
North American model:	40 W
European model:	45 W 0.3 W (in Power Saving Mode)
Other models:	45 W
Dimensions (w/h/d) (excl. speakers)	Approx. 164 × 235 × 265 mm
Mass (excl. speakers)	
CMT-NEZ5:	Approx. 3.6 kg
CMT-NEZ3	
North American model:	Approx. 2.8 kg
Other models:	Approx. 3.6 kg

Design and specifications are subject to change without notice.

Notes on chip component replacement

- Never reuse a disconnected chip component.
- Notice that the minus side of a tantalum capacitor may be damaged by heat.

Flexible Circuit Board Repairing

- Keep the temperature of the soldering iron around 270 ˚C during repairing.
- Do not touch the soldering iron on the same conductor of the circuit board (within 3 times).
- Be careful not to apply force on the conductor when soldering or unsoldering.

CAUTION

Use of controls or adjustments or performance of procedures other than those specified herein may result in hazardous radiation exposure.

The following caution label is located inside the unit.

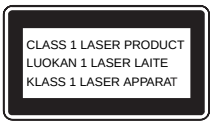

This appliance is classified as a CLASS 1 LASER product.

This label is located on the rear exterior.

SAFETY CHECK-OUT

After correcting the original service problem, perform the following safety check before releasing the set to the customer:
Check the antenna terminals, metal trim, "metallized" knobs, screws, and all other exposed metal parts for AC leakage.
Check leakage as described below.

SAFETY-RELATED COMPONENT WARNING!!

COMPONENTS IDENTIFIED BY MARK ⚠ OR DOTTED LINE WITH MARK ⚠ ON THE SCHEMATIC DIAGRAMS AND IN THE PARTS LIST ARE CRITICAL TO SAFE OPERATION. REPLACE THESE COMPONENTS WITH SONY PARTS WHOSE PART NUMBERS APPEAR AS SHOWN IN THIS MANUAL OR IN SUPPLEMENTS PUBLISHED BY SONY.

LEAKAGE TEST

The AC leakage from any exposed metal part to earth ground and from all exposed metal parts to any exposed metal part having a return to chassis, must not exceed 0.5 mA (500 microamperes.). Leakage current can be measured by any one of three methods.

1. A commercial leakage tester, such as the Simpson 229 or RCA WT-540A. Follow the manufacturers' instructions to use these instruments.
2. A battery-operated AC milliammeter. The Data Precision 245 digital multimeter is suitable for this job.
3. Measuring the voltage drop across a resistor by means of a VOM or battery-operated AC voltmeter. The "limit" indication is 0.75 V, so analog meters must have an accurate low-voltage scale. The Simpson 250 and Sanwa SH-63Trd are examples of a passive VOM that is suitable. Nearly all battery operated digital multimeters that have a 2 V AC range are suitable. (See Fig. A)

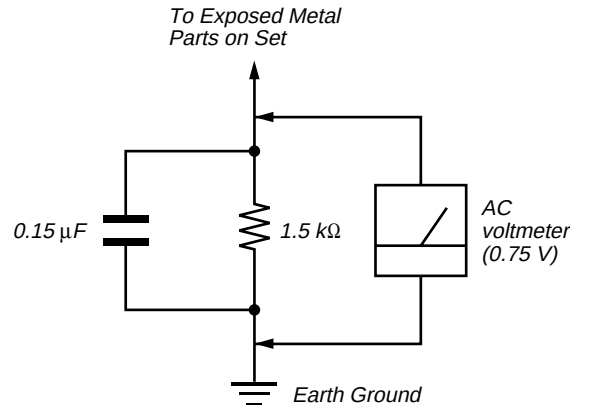

Fig. A. Using an AC voltmeter to check AC leakage.

ATTENTION AU COMPOSANT AYANT RAPPORT À LA SÉCURITÉ!

LES COMPOSANTS IDENTIFIÉS PAR UNE MARQUE ⚠ SUR LES DIAGRAMMES SCHÉMATIQUES ET LA LISTE DES PIÈCES SONT CRITIQUES POUR LA SÉCURITÉ DE FONCTIONNEMENT. NE REMPLACER CES COM- POSANTS QUE PAR DES PIÈCES SONY DONT LES NUMÉROS SONT DONNÉS DANS CE MANUEL OU DANS LES SUPPLÉMENTS PUBLIÉS PAR SONY.

TABLE OF CONTENTS

1. SERVICING NOTES 4

2. GENERAL 6

3. DISASSEMBLY
3-1. Disassembly Flow 8
3-2. Cabinet 8
3-3. Cabinet (Top) Section 9
3-4. Base Unit (BU-K7BD81D2) 9
3-5. Front Panel Section 10
3-6. Mechanical Deck (CMAL5Z231) 10
3-7. MAIN Board 11
3-8. Tuner Unit 11

4. TEST MODE 12

5. MECHANICAL ADJUSTMENTS 13

6. ELECTRICAL ADJUSTMENTS 13

7. DIAGRAMS
7-1. Block Diagram – CD SERVO Section – 15
7-2. Block Diagram – MAIN Section – 16
7-3. Printed Wiring Board – CD Board – 18
7-4. Schematic Diagram – CD Board – 19
7-5. Printed Wiring Boards – MAIN Section – 21
7-6. Schematic Diagram – MAIN Section (1/2) – 22
7-7. Schematic Diagram – MAIN Section (2/2) – 23
7-8. Printed Wiring Board – PANEL Board – 24
7-9. Schematic Diagram – PANEL Board – 25
7-10. Printed Wiring Boards – DC Section – 26
7-11. Printed Wiring Board – AC Board – 27
7-12. Schematic Diagram – POWER SUPPLY Section – 28

8. EXPLODED VIEWS
8-1. Cabinet Section 35
8-2. Mechanical Deck Section 36
8-3. Panel Board Section 37
8-4. Cabinet (Top) Section 38
8-5. MAIN Board Section 39
8-6. AC Board, DC Board Section 40

9. ELECTRICAL PARTS LIST 41

SECTION 1
SERVICING NOTES

NOTES ON HANDLING THE OPTICAL PICK-UP BLOCK OR BASE UNIT

The laser diode in the optical pick-up block may suffer electrostatic break-down because of the potential difference generated by the charged electrostatic load, etc. on clothing and the human body.
During repair, pay attention to electrostatic break-down and also use the procedure in the printed matter which is included in the repair parts.
The flexible board is easily damaged and should be handled with care.

: LEAD FREE MARK

Unleaded solder has the following characteristics.

- Unleaded solder melts at a temperature about 40 ˚C higher than ordinary solder.
  Ordinary soldering irons can be used but the iron tip has to be applied to the solder joint for a slightly longer time.
  Soldering irons using a temperature regulator should be set to about 350 ˚C.
  Caution: The printed pattern (copper foil) may peel away if the heated tip is applied for too long, so be careful!
- Strong viscosity
  Unleaded solder is more viscou-s (sticky, less prone to flow) than ordinary solder so use caution not to let solder bridges occur such as on IC pins, etc.
- Usable with ordinary solder
  It is best to use only unleaded solder but unleaded solder may also be added to ordinary solder.

LASER DIODE AND FOCUS SEARCH OPERATION CHECK

During normal operation of the equipment, emission of the laser diode is prohibited unless the upper lid is closed while turning ON the S1820. (push switch type)
The following checking method for the laser diode is operable.

- **Method**
  Emission of the laser diode is visually checked.

1. Open the upper lid.
2. Push the S1820 as shown in Fig.1.

Note: Do not push the detection lever strongly, or it may be bent or damaged.

3. Press the ▶II button.
4. Check the object lens for confirming normal emission of the laser diode. If not emitting, there is a trouble in the automatic power control circuit or the optical pick-up.
   In this operation, the object lens will move up and down 2 times along with inward motion for the focus search.

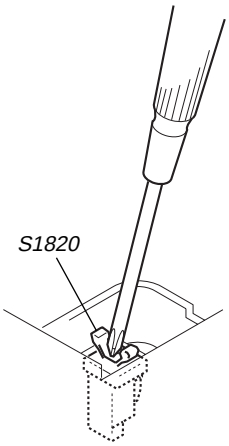

Fig.1 Method to push the S1820

NOTES ON LASER DIODE EMISSION CHECK

The laser beam on this model is concentrated so as to be focused on the disc reflective surface by the objective lens in the optical pick-up block. Therefore, when checking the laser diode emission, observe from more than 30 cm away from the objective lens.

UNLEADED SOLDER

Boards requiring use of unleaded solder are printed with the lead-free mark (LF) indicating the solder contains no lead.
(Caution: Some printed circuit boards may not come printed with the lead free mark due to their particular size)

• MODEL IDENTIFICATION
– Rear Cabinet –

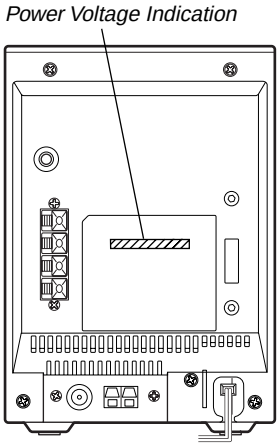

MODEL	Power Voltage Incdication
NEZ3: US, CND	AC: 120 V 60 Hz 40 W
NEZ3: AEP, UK, EE, RU	AC: 230 V ∿ 50/60 Hz 45 W
NEZ3: E, E51, SP	AC: 120 V/220 V/230 – 240 V ∿ 50/60 Hz 45 W
NEZ3: EA	AC: 120 – 127 V/220 V/230 – 240 V ∿ 50/60 Hz 45 W
NEZ3: MX	ca ∿ 120 V 60 Hz 45 W
NEZ3: TW	AC: 120 V ∿ 50/60 Hz 45 W
NEZ3: AR	ca ∿ 220 V 50/60 Hz 45 W
NEZ3: KR	AC: 220 V ∿ 60 Hz 45 W
NEZ3: AUS	AC: 230 – 240 V ∿ 50/60 Hz 45 W
NEZ5: CND	AC: 120 V 60 Hz 50 W
NEZ5: AEP, UK, EE, RU	AC: 230 V ∿ 50/60 Hz 60 W
NEZ5: E, E51, SP	AC: 120 V/220 V/230 – 240 V ∿ 50/60 Hz 50 W
NEZ5: MX	ca ∿ 120 V 60 Hz 50 W
NEZ5: TW	AC: 120 V ∿ 50/60 Hz 50 W
NEZ5: AR	ca ∿ 220 V 50/60 Hz 50 W
NEZ5: KR	AC: 220 V ∿ 60 Hz 50 W

- Abbreviation
  AR : Argentina model
  AUS : Australian model
  CND: Canadian model
  E51 : Chilean and Peruvian model
  EA : Saudi Arabia model
  EE : East European model
  KR : Korean model
  MX : Mexican model
  RU : Russian model
  SP : Singapore model
  TW : Taiwan model

SERVICE POSITION

– CD BOARD –

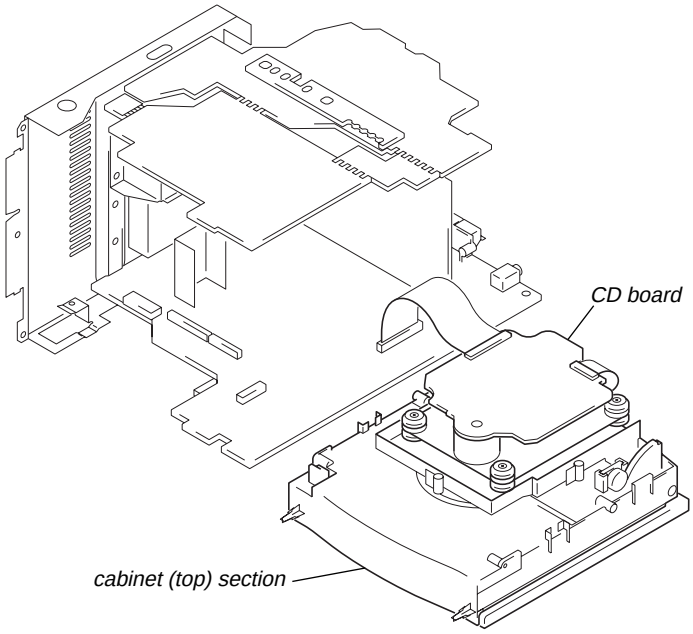

– TAPE MECHANICAL DECK –

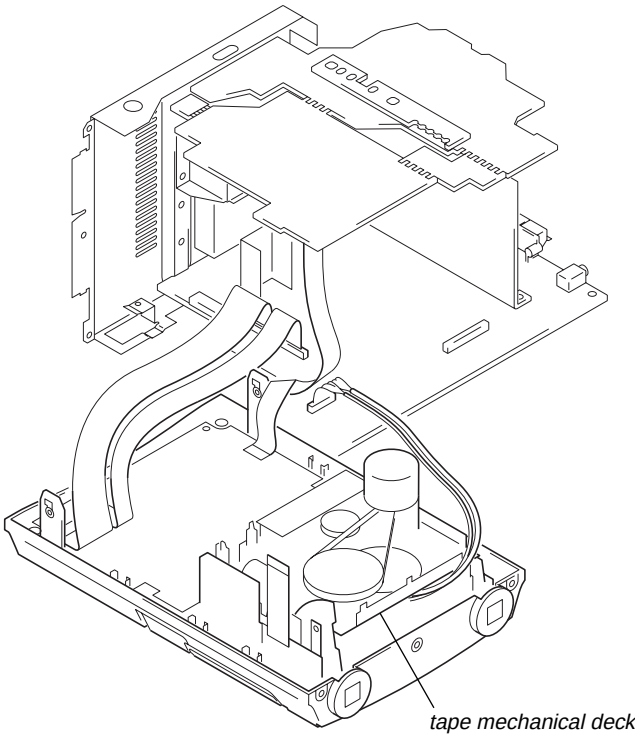

SECTION 2
GENERAL

This section is extracted from instruction manual.

Main unit

ALPHABETICAL ORDER

A – S

CD SYNC 18
Display window 6
DSGX 3
PHONES jack 13
PLAY MODE 5
Remote sensor 2

T – Z

Tape deck 12
TUNER/BAND 15
TUNING +/– 10
TUNING MODE 5
VOLUME control 9

BUTTON DESCRIPTIONS

I/⏻ (power) 1
● PAUSE/START 4
⏏ PUSH OPEN/CLOSE (CD open/close) 7
🗀 +/– 8*
⏮ ◀◀/▶▶ ⏭ (rewind/fast forward, go back/go forward) 10
PUSH OPEN/CLOSE ⏏ (tape open/close) 11
■ (stop) 14
CD/▶II (play) 16
TAPE/▶ 17
* Except for North American model CMT-NEZ3

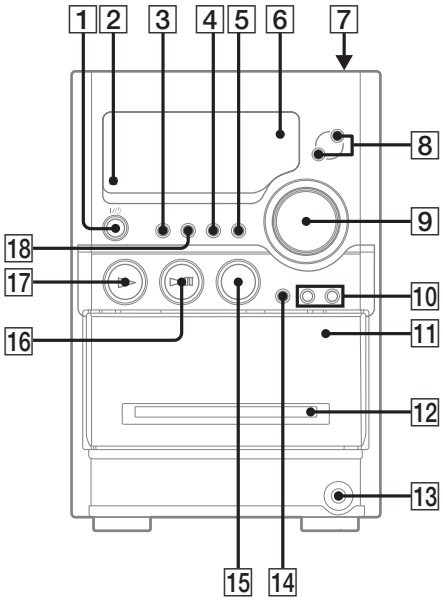

Remote control

ALPHABETICAL ORDER

A – O

CD 16
CLEAR 13
CLOCK/TIMER SELECT 2
CLOCK/TIMER SET 3
DISPLAY 19
ENTER 9
EQ 12
FM MODE 4
FUNCTION 6

P – Z

PLAY MODE 18
REPEAT 4
SLEEP 20
TAPE 15
TUNER/BAND 5
TUNER MEMORY 17
TUNING MODE 18
VOLUME +/– 10

BUTTON DESCRIPTIONS

I/⏻ (power) 1
◀◀/▶▶ (rewind/fast forward) 7
▶ (play) 8
❚❚ (pause) 8
■ (stop) 8
🗀 +/– 11
⏮/⏭ (go back/go forward) 14
–/+ (tuning) 14

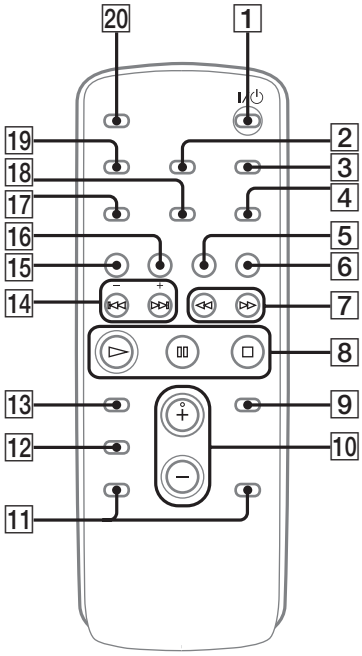

Setting the clock

Use buttons on the remote for the operation.

1 **Press I/⏻ to turn on the unit.**

2 **Press CLOCK/TIMER SET.**

3 **Press ⏮ or ⏭ repeatedly to set the hour.**

4 **Press ENTER.**

5 **Press ⏮ or ⏭ repeatedly to set the minute.**

6 **Press ENTER.**

The clock starts working.

To adjust the clock

1 Press CLOCK/TIMER SET.

2 Press ⏮ or ⏭ repeatedly to select "CLOCK", then press ENTER.

3 Do the same procedures as step 3 to 6 above.

Note

The clock is not displayed in Power Saving Mode.

SECTION 3
DISASSEMBLY

- This set can be disassembled in the order shown below.

3-1. DISASSEMBLY FLOW

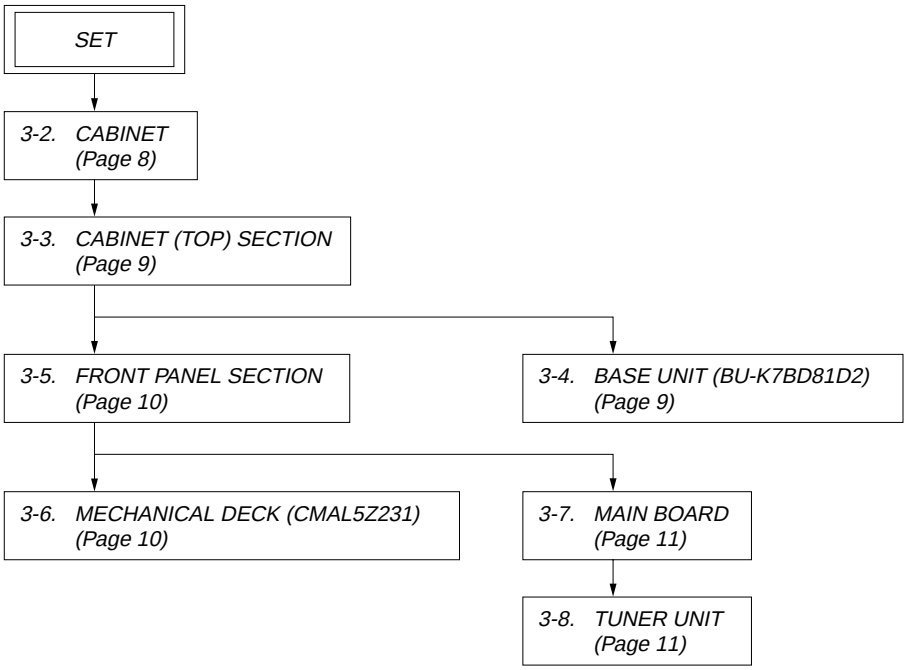

Note: Follow the disassembly procedure in the numerical order given.

3-2. CABINET

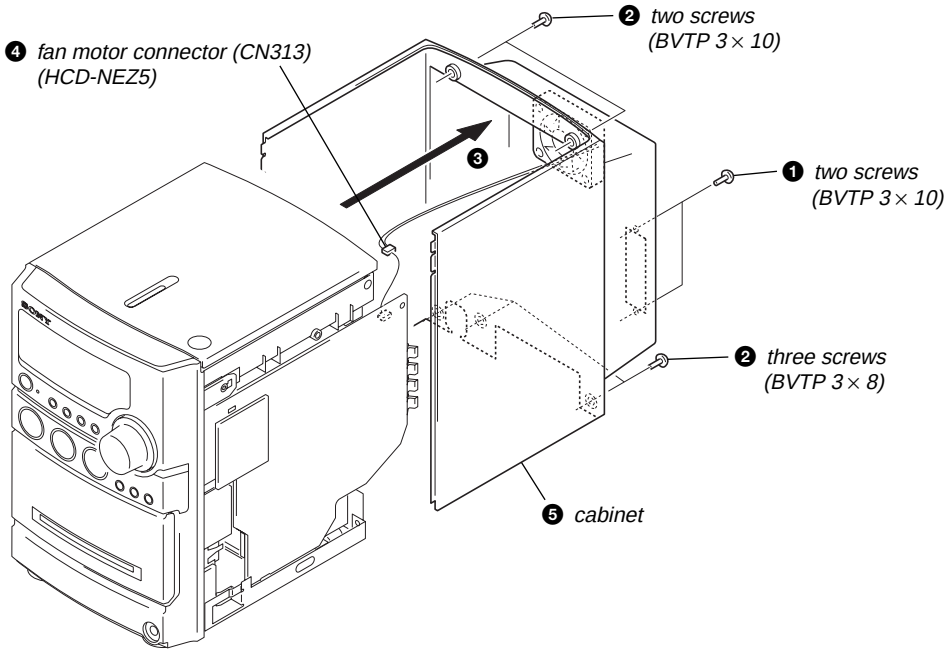

3-3. CABINET (TOP) SECTION

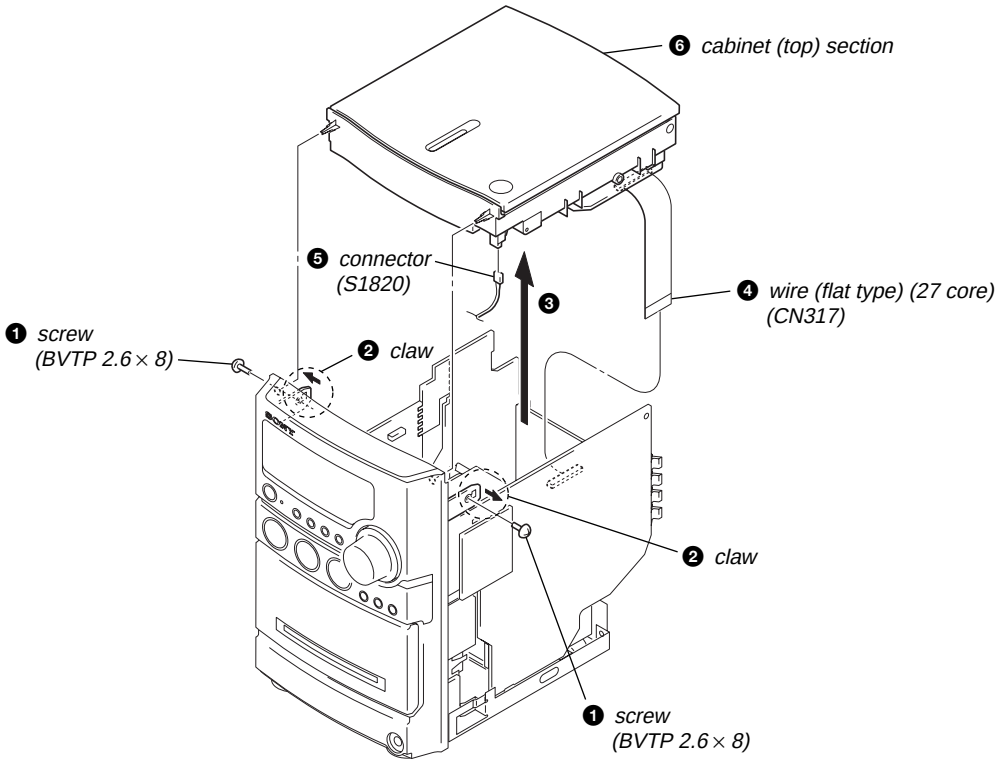

3-4. BASE UNIT (BU-K7BD81D2)

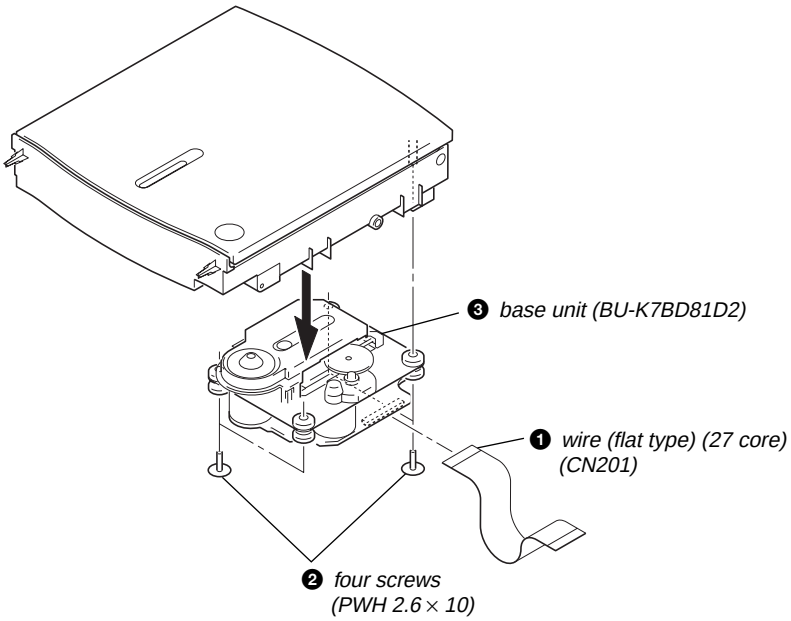

3-5. FRONT PANEL SECTION

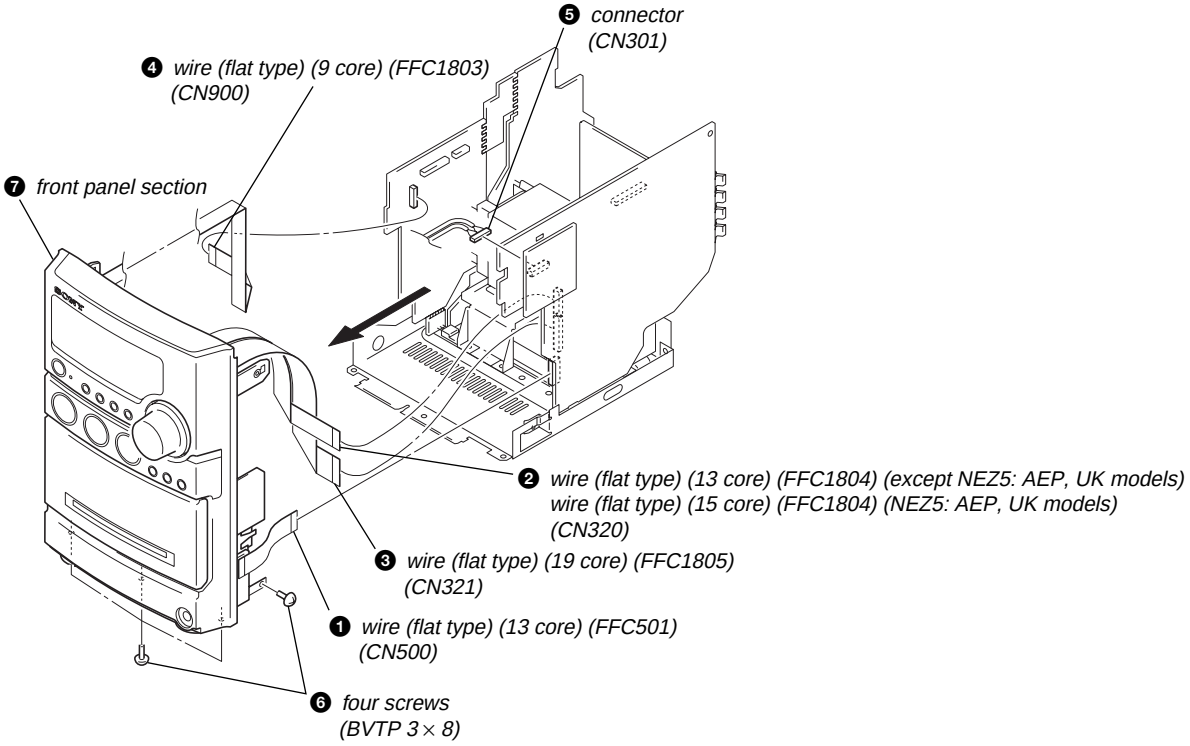

3-6. MECHANICAL DECK (CMAL5Z231)

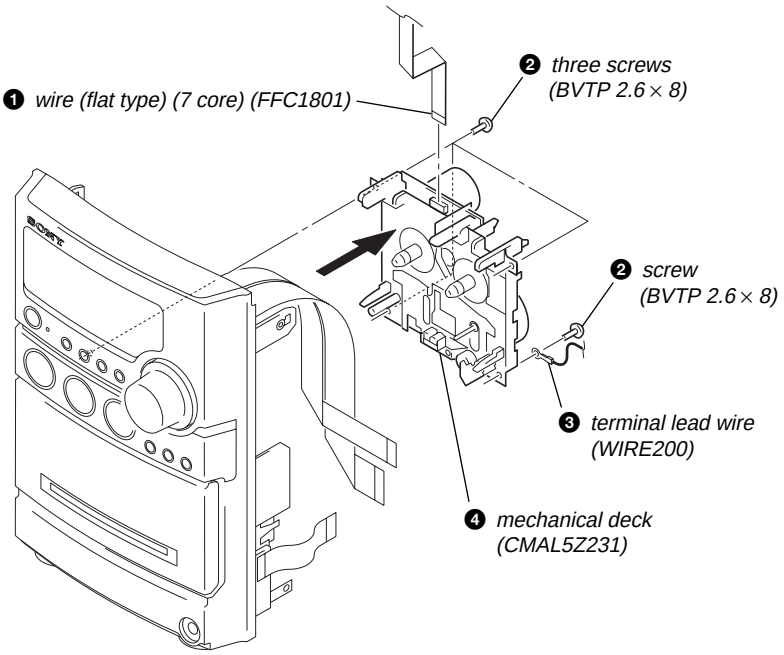

3-7. MAIN BOARD

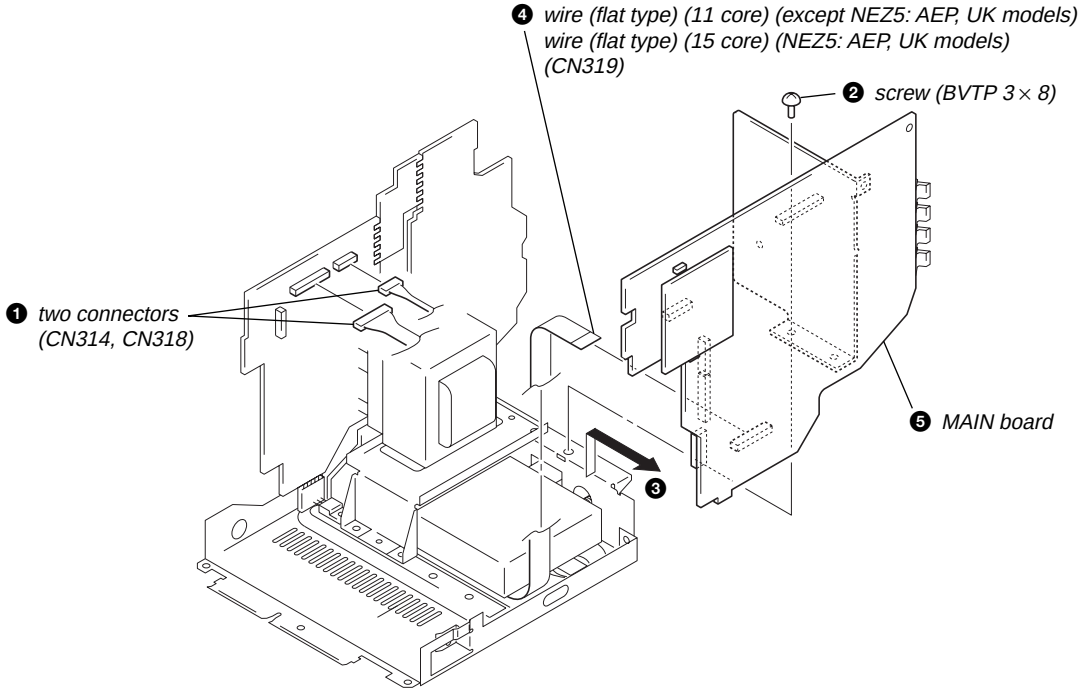

3-8. TUNER UNIT

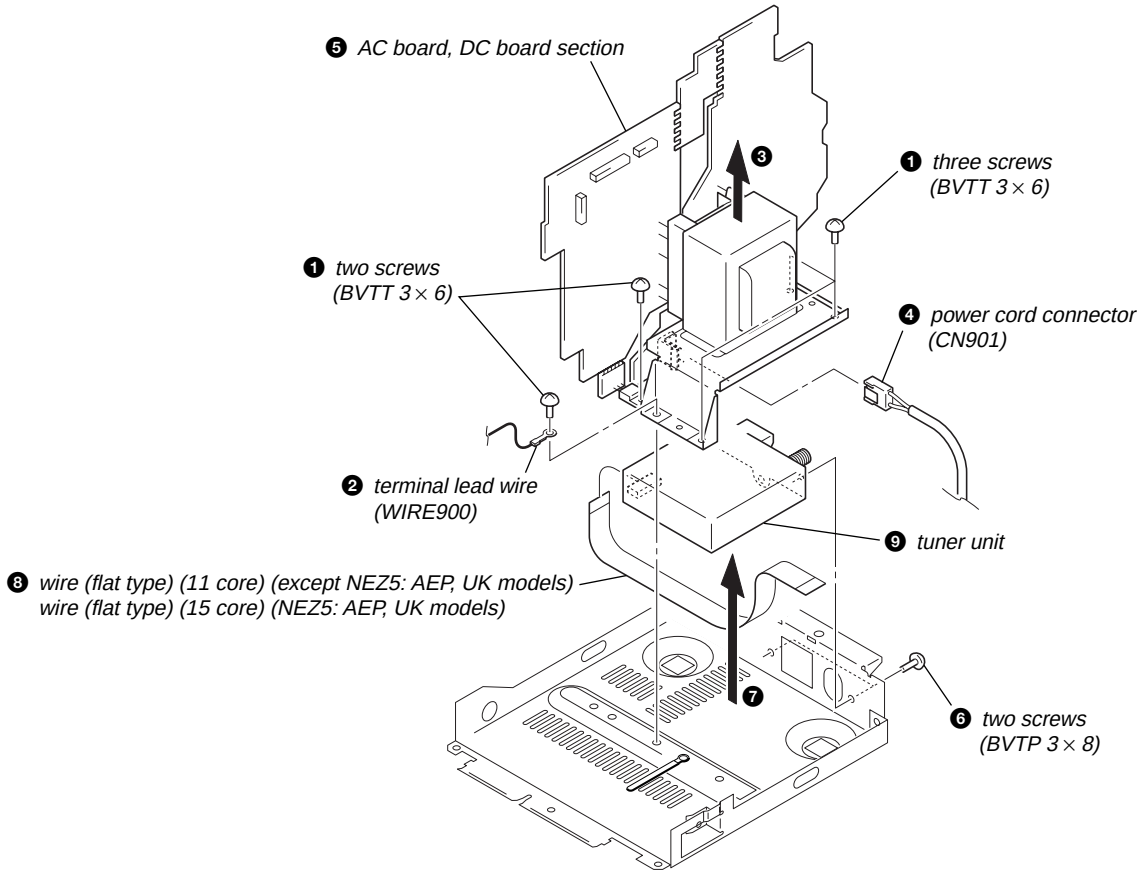

SECTION 4
TEST MODE

COLD RESET

* The cold reset clears all data including preset data stored in the RAM to initial conditions. Execute this mode when returning the set to the customer.

Procedure:

1. Press the [I/⏻] button to turn the power on.
2. While pressing the [■] button, press the [I/⏻] button and turn the [VOLUME] knob in the counter-clock wise.
3. The message "RESET" is displayed and the set is reset.

PANEL TEST

* All segments of liquid crystal display are tested, and the version and released date of the micro computer are displayed.

Procedure:

1. Press the [I/⏻] button to turn the power on.
2. While pressing the [DSGX] button, press the [⏮ ◀◀] button and turn the [VOLUME] knob in the counter-clock wise. Then all segments of liquid crystal display are turned on.
3. Press the [DSGX] button, the version and released date of the micro computer are displayed.
   example of display:

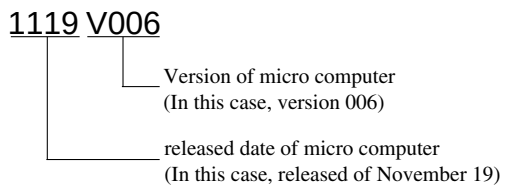

4. Press the [TUNER/BAND] button, the model name and distination are displayed.
   example of display:

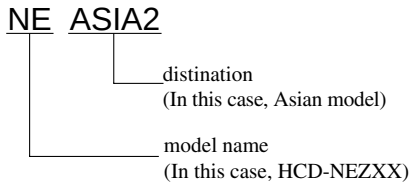

5. Press the [PLAY MODE/TUNING MODE] button, "KEY 0 0" is displayed on the liquid crystal display, and key test mode in. Each time a key is pressed, the numerical value corresponding to each key is displayed on the liquid crystal display.
6. To exit from this mode, perform the "COLD RESET".

TUNER STEP CHANGE-OVER

* Either the 9 kHz step or 10 kHz step can be selected for the AM channel step.

Procedure:

1. Set the FUNCTION to AM, and press the [I/⏻] button to turn the power off.
2. While depressing the [TUNER/BAND] button, press the [I/⏻] button.
3. The message "9K STEP" or "10K STEP" is displayed on the liquid crystal display, and thus the channel step is changed over.

CD ERROR HISTORY

* This mode can be used for CD error history display.

Procedure:

1. Set the FUNCTION to CD.
2. While pressing the [DSGX] button, press the [CD ▶II] button and turn the [VOLUME] knob in the counter-clock wise.
3. CD error history is displayed on the liquid crystal display. Each time [⏮ ◀◀] or [▶▶ ⏭] button is pressed, CD error history is changed.

CD POWER MANEGE

* This mode is for switch the CD power supply on/off. Even if this state pulls out AC plug, it is held.

Procedure:

1. Press the [I/⏻] button to turn the power on.
2. Set the FUNCTION to CD.
3. Press the [I/⏻] button again to turn the power off (standby).
4. While pressing the [CD ▶II] button, press the [I/⏻] button.
5. If turns power on and display "CD POWER", then display "ON" or "OFF".

SECTION 5
MECHANICAL ADJUSTMENTS

- **Precaution**

1. Clean the following parts with a denatured-alcohol-moistened swab :
   record/playback head　　pinch roller
   erase head　　rubber belts
   capstan　　idlers
2. Demagnetize the record/playback head with a head demagnetizer. (Do not bring the head magnetizer close to the erase head.)
3. Do not use a magnetized screwdriver for the adjustments.
4. After the adjustments, appiy suitable locking compound to the parts adjusted.
5. The adjustments should be performed with the rated power supply voltage unless otherwise noted.

- **Torque Measurement**

Mode	Torque Meter	Meter Reading
FWD	CQ-102C	2.95 – 6.86 mN·m (30 – 70 g·cm) (0.42 – 0.97 oz·inch)
FWD Back Tension	CQ-102C	0.15 – 5.39 mN·m (1.5 – 5.5 g·cm) (0.021 – 0.076 oz·inch)
FF	CQ-201B	more than 5.89 mN·m (more than 60 g·cm) (more than 0.83 oz·inch)
REW	CQ-201B	more than 5.89 mN·m (more than 60 g·cm) (more than 0.83 oz·inch)

- **Tape Tension Measurement**

Mode	Tension Meter	Meter Reading
FWD	CQ-403A	more than 100 g (more than 3.53 oz)

SECTION 6
ELECTRICAL ADJUSTMENTS

DECK SECTION　　0 dB=0.775 V

1. Demagnetize the record/playback head with a head demagnetizer.
2. Do not use a magnetized screwdriver for the adjustments.

- **Test Tape**

Tape	Signal	Used for
P-4-A063	6.3 kHz, -10 dB	Azimuth Adjustment

RECORD/PLAYBACK HEAD AZIMUTH ADJUSTMENT

Note: Remove the cover (azimuth) before this adjustment.

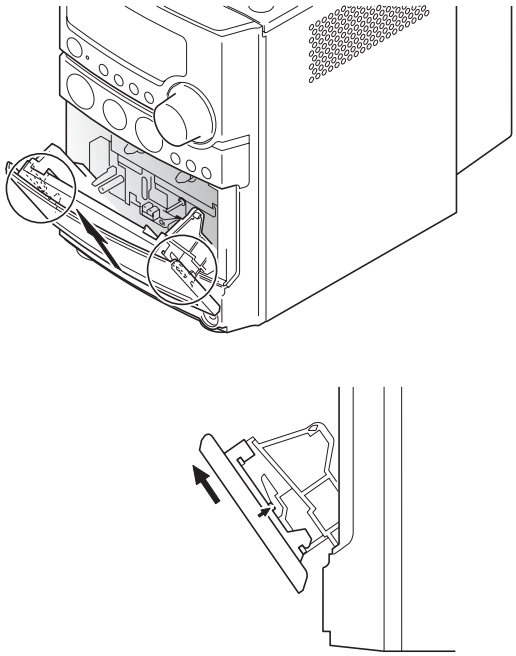

Procedure:

1. Mode: Playback

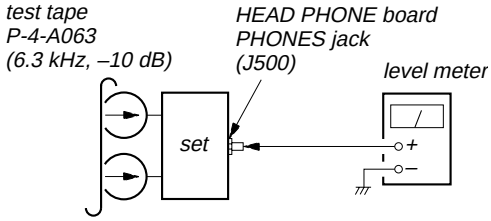

2. Turn the adjustment screw and check output peaks. If the peaks do not match for L-CH and R-CH, turn the adjustment screw so that outputs match within 1dB of peak.

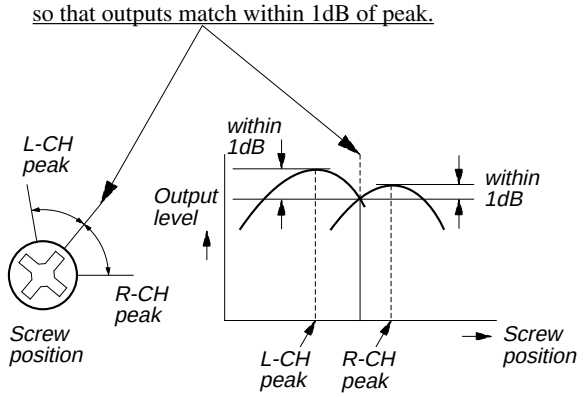

3. Mode: Playback

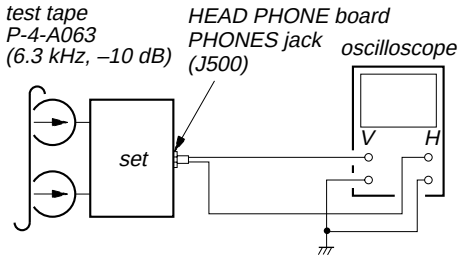

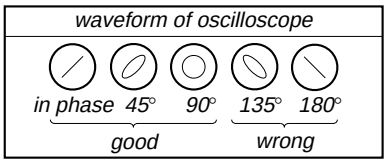

4. After the adjustments, apply suitable locking compound to the pats adjusted.

Adjustment Location: Record/Playback/Erase Head

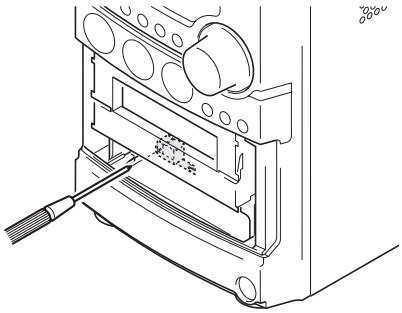

CD SECTION

Note:

1. CD Block is basically constructed to operate without adjustment.
2. Use YEDS-18 disc (3-702-101-01) unless otherwise indicated.
3. Use an oscilloscope with more than 10 MΩ impedance.
4. Clean the object lens by an applicator with neutral detergent when the signal level is low than specified value with the following checks.
5. Check the focus bias check when optical block is replaced.

FOCUS BIAS CHECK

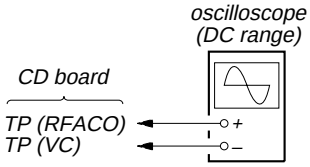

Procedure :

1. Connect the oscilloscope to TP (RFACO) and TP (VC) on the CD board.
2. Insert the disc (YEDS-18). (Part No. : 3-702-101-01)
3. Press the CD ▶II button.
4. Confirm that the oscilloscope waveform is as shown in the figure below. (eye pattern)
   A good eye pattern means that the diamond shape (◊) in the center of the waveform can be clearly distinguished.

- **RF signal reference waveform (eye pattern)**

VOLT/DIV: 0.2 V (with the 10: 1 probe in use.)
TIME/DIV: 500 ns

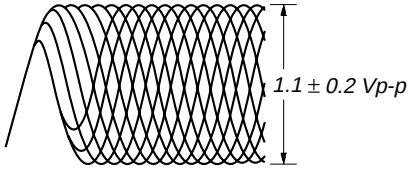

When observing the eye pattern, set the oscilloscope for AC range and raise vertical sensitivity.

Checking Location:

– CD BOARD (Conductor Side) –

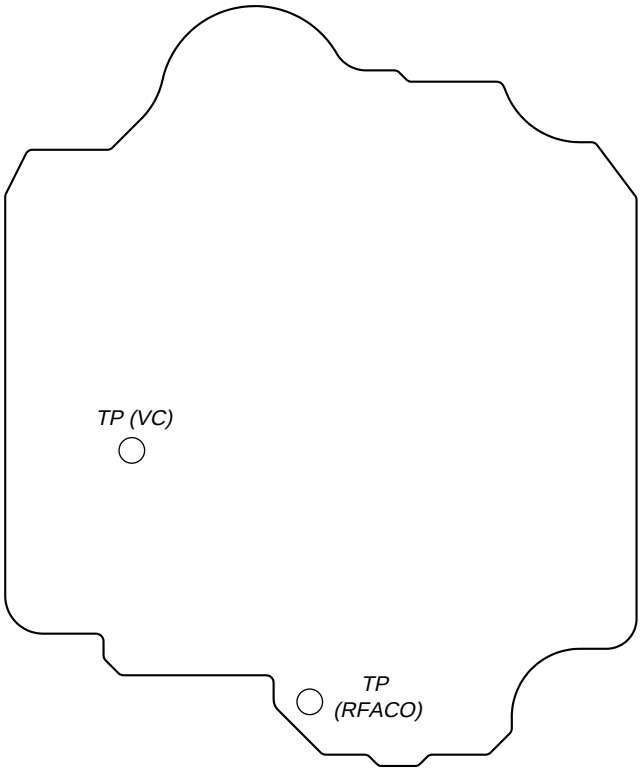

SECTION 7
DIAGRAMS

7-1. BLOCK DIAGRAM – CD SERVO Section –

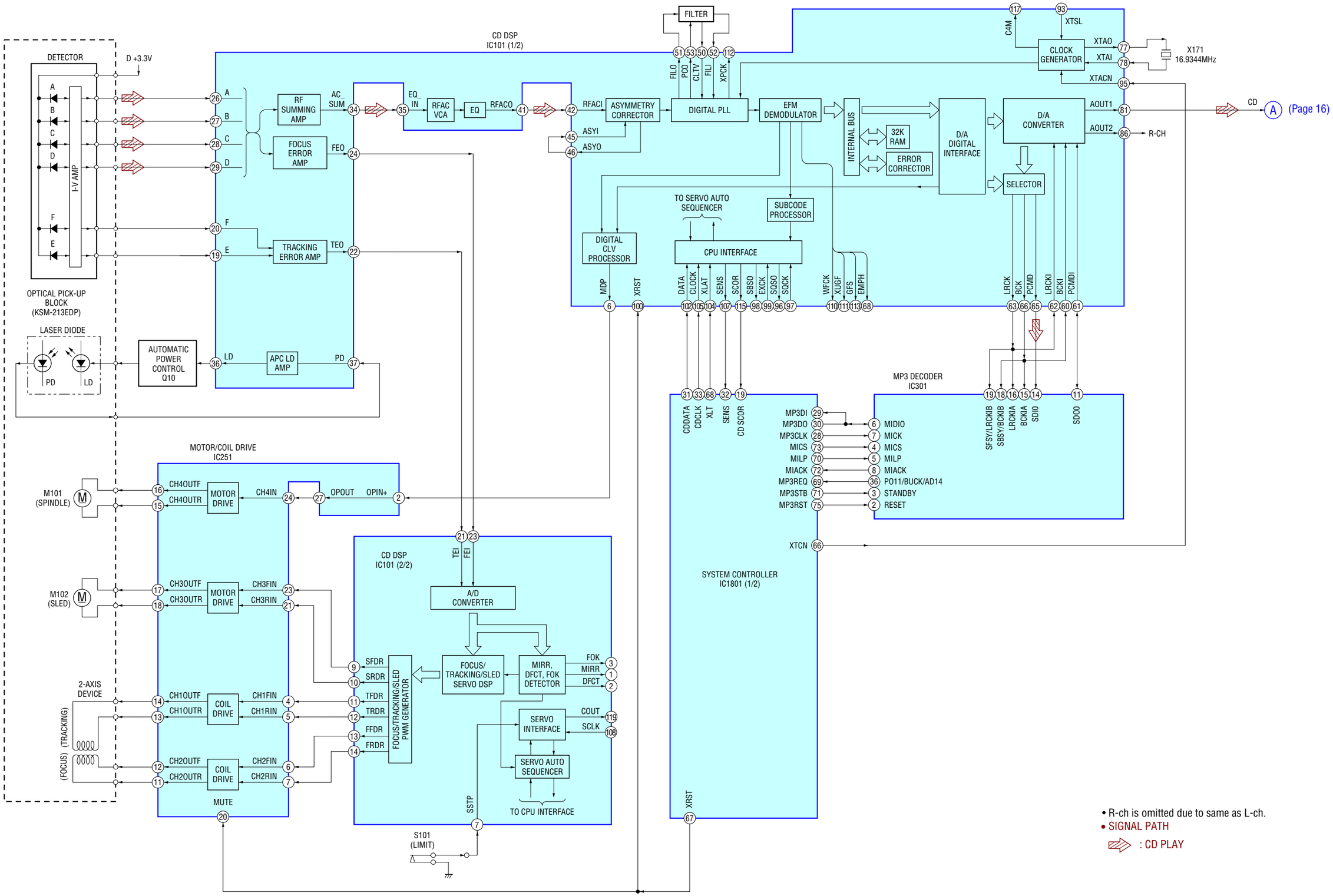

- R-ch is omitted due to same as L-ch.
- SIGNAL PATH
  : CD PLAY

7-2. BLOCK DIAGRAM – MAIN Section –

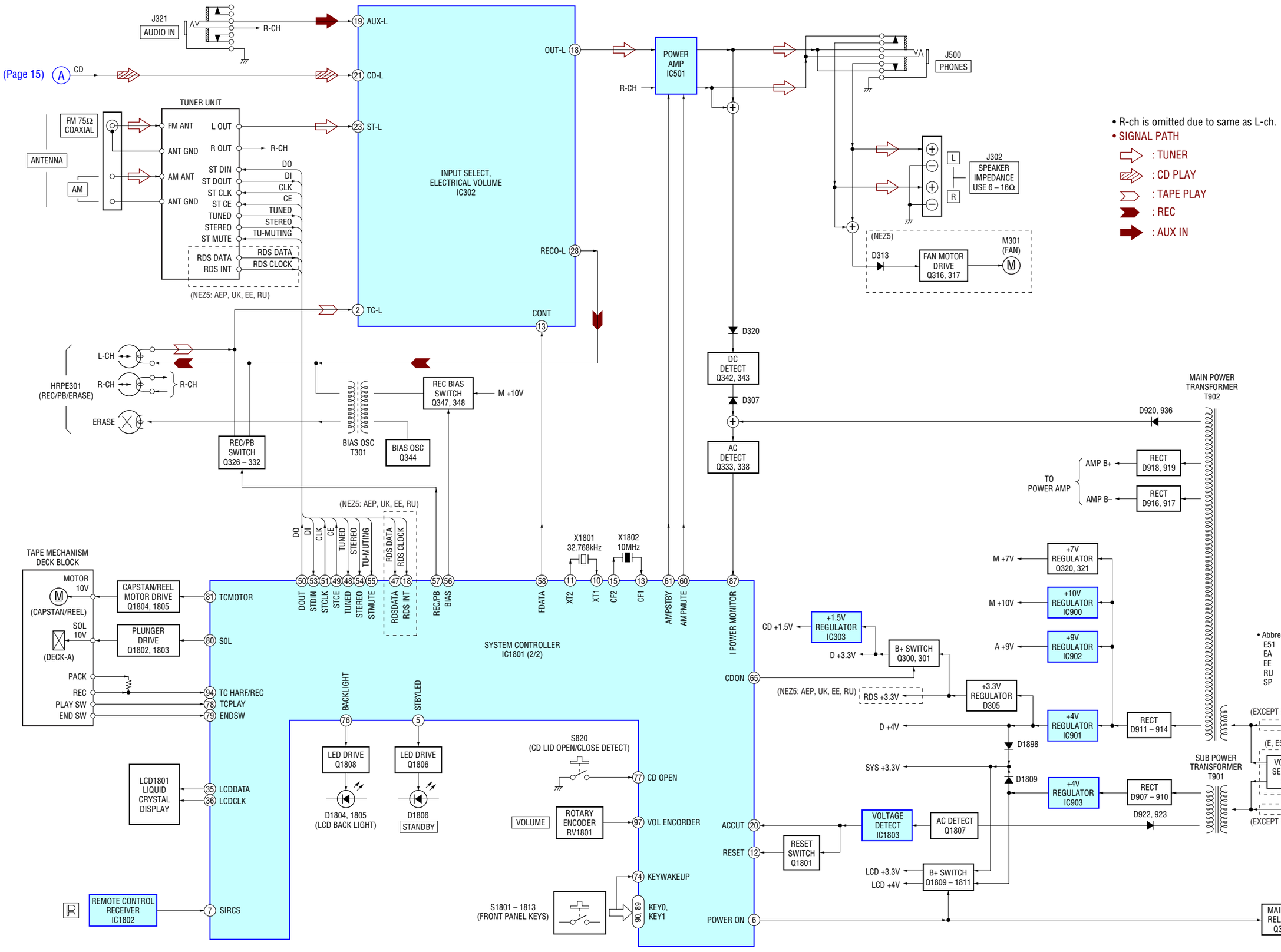

• Note for Printed Wiring Boards and Schematic Diagrams

Note on Printed Wiring Board:

- ○——— : parts extracted from the component side.
- ——— : parts extracted from the conductor side.
- △ : internal component.
- ▬ : Pattern from the side which enables seeing.

(The other layers' patterns are not indicated.)

Caution:	
Pattern face side: (Conductor Side)	Parts on the pattern face side seen from the pattern face are indicated.
Parts face side: (Component Side)	Parts on the parts face side seen from the parts face are indicated.

- Indication of transistor

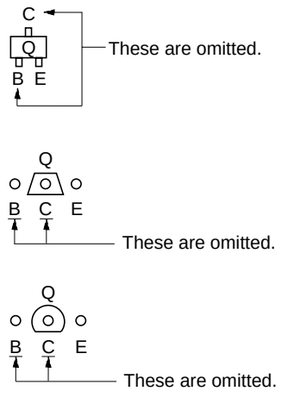

Note on Schematic Diagram:

- All capacitors are in µF unless otherwise noted. (p: pF) 50 WV or less are not indicated except for electrolytics and tantalums.
- All resistors are in Ω and 1/4 W or less unless otherwise specified.
- △ : internal component.
- : nonflammable resistor.
- : fusible resistor.
- ▭ : panel designation.

Note:	**Note:**
The components identified by mark ⚠ or dotted line with mark ⚠ are critical for safety. Replace only with part number specified.	Les composants identifiés par une marque ⚠ sont critiques pour la sécurité. Ne les remplacer que par une pièce portant le numéro spécifié.

- ▬▬ : B+ Line.
- ▬ ▬ ▬ : B– Line.
- Voltages and waveforms are dc with respect to ground under no-signal conditions.
  – CD Board –
  no mark : CD PLAY
  – Other Section –
  no mark : TUNER
  ( ) : CD PLAY
  《 》 : TAPE PLAY
  { } : REC
- Voltages are taken with a VOM (Input impedance 10 MΩ). Voltage variations may be noted due to normal production tolerances.
- Waveforms are taken with a oscilloscope. Voltage variations may be noted due to normal production tolerances.
- Circled numbers refer to waveforms.
- Signal path.
  ⇨ : TUNER
  ⇨ : CD PLAY
  ⇨ : TAPE PLAY
  ⇨ : REC
  ⇨ : AUX IN
- Abbreviation

AR	: Argentina model
AUS	: Australian model
CND	: Canadian model
E51	: Chiliean and Peruvian models
EA	: Saudi Arabia model
EE	: East European model
KR	: Korean model
MX	: Mexican model
RU	: Russian model
SP	: Singapore model
TW	: Taiwan model

• Circuit Boards Location

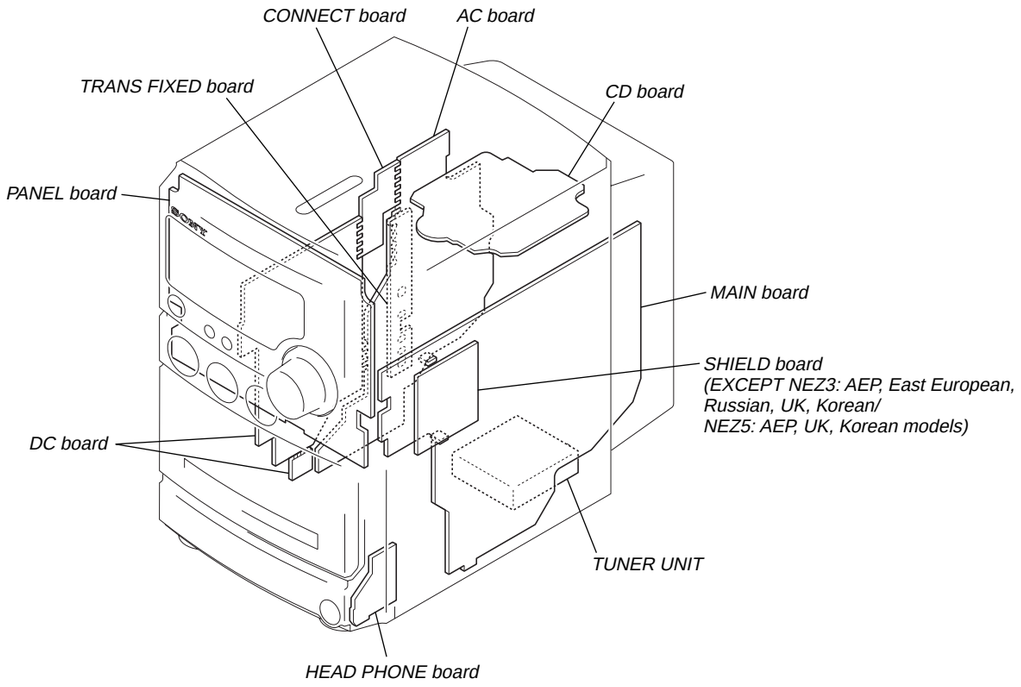

7-3. PRINTED WIRING BOARD – CD Board –

• See page 17 for Circuit Boards Location. : Uses unleaded solder.

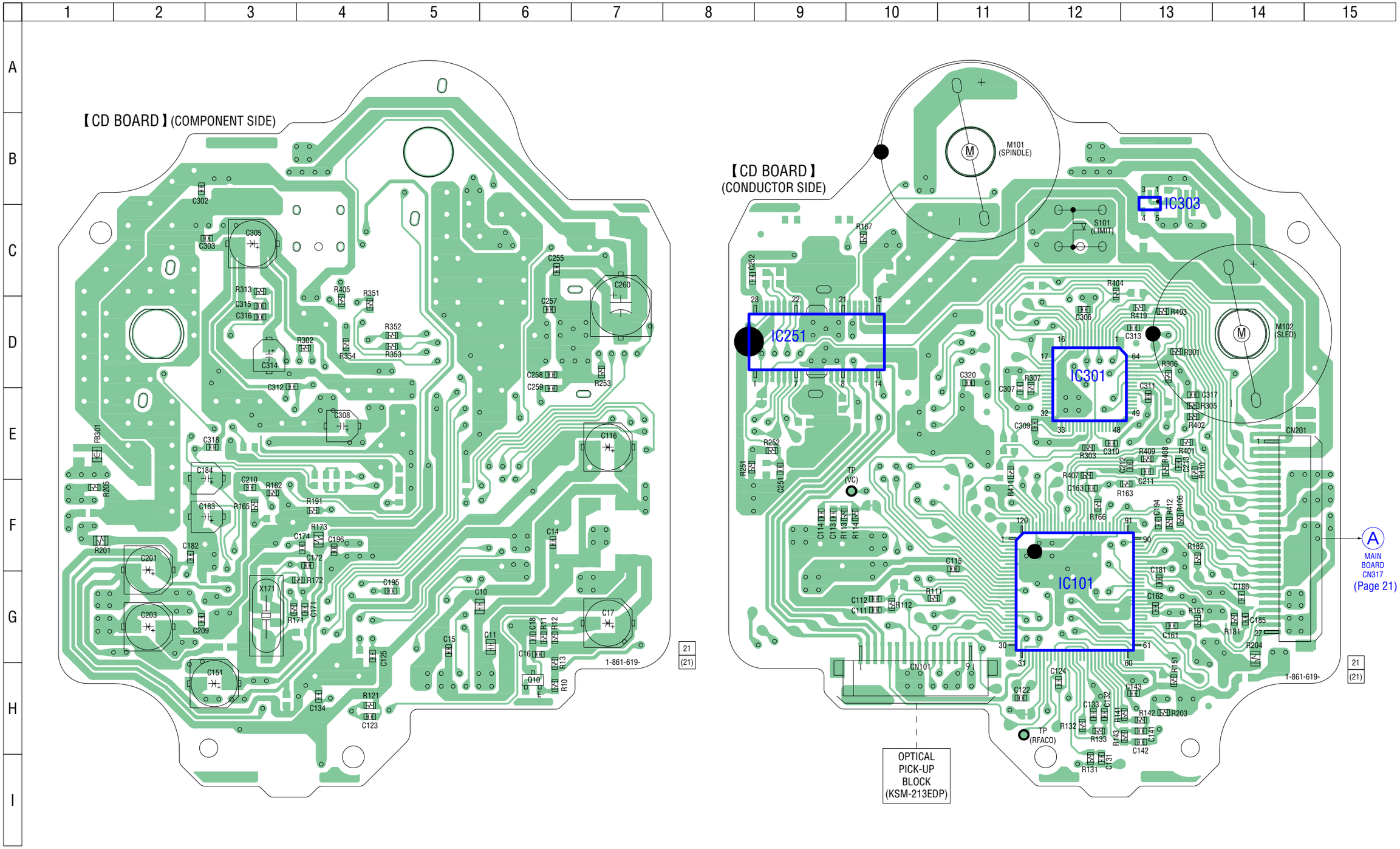

7-4. SCHEMATIC DIAGRAM – CD Board –

• See page 20 for Waveforms. • See page 29 for IC Block Diagrams.

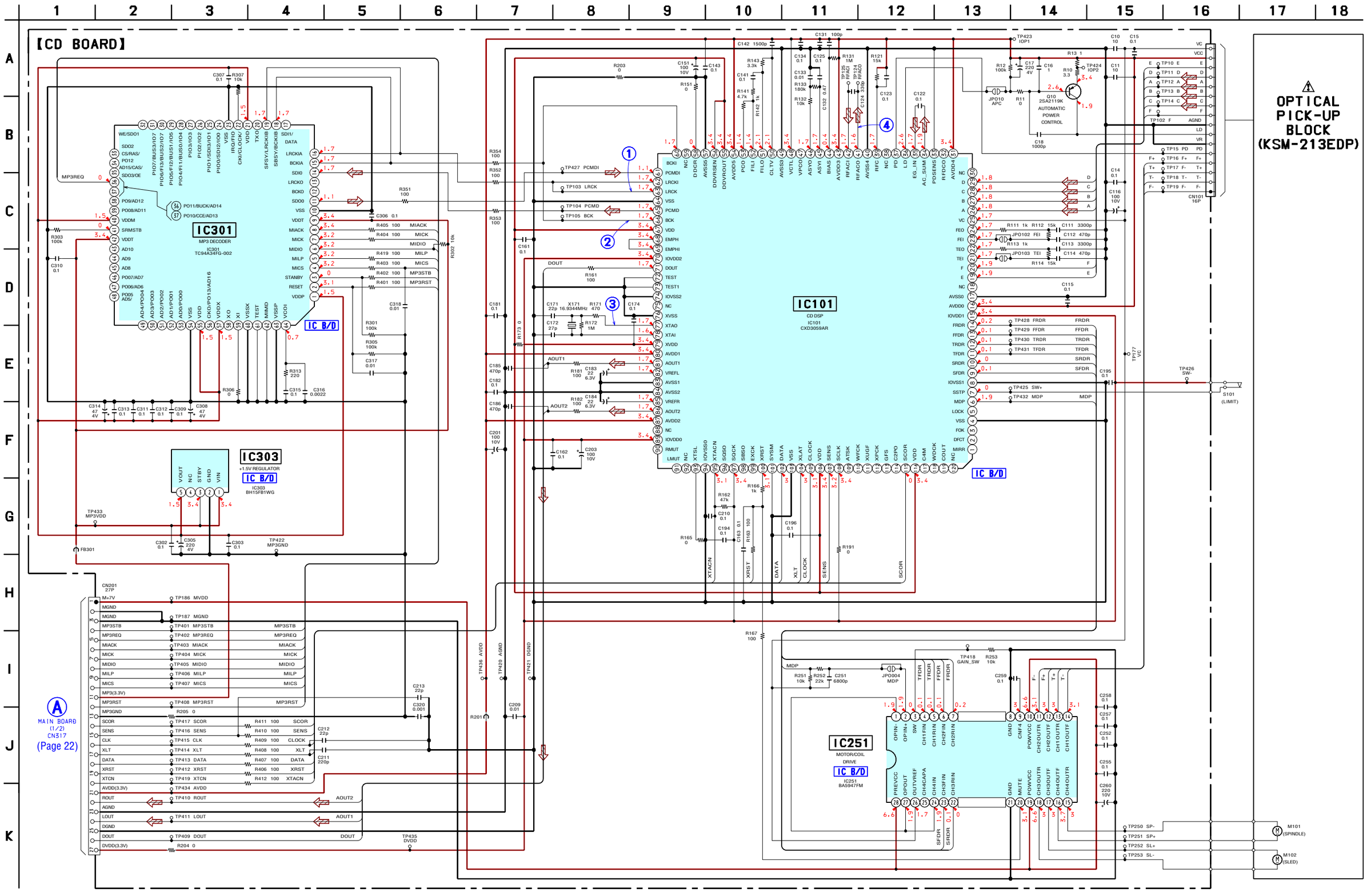

The components identified by mark ⚠ or dotted line with mark ⚠ are critical for safety.
Replace only with part number specified.

Les composants identifiés par une marque ⚠ sont critiques pour la sécurité. Ne les remplacer que par une pièce portant le numéro spécifié.

- **Waveforms**

– CD Board –

① IC101 ⑥③ (LRCK)
(CD PLAY mode)

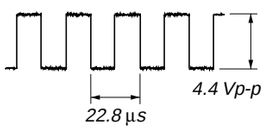

1 V/DIV, 10 µs/DIV

② IC101 ⑥⑥ (BCK)
(CD PLAY mode)

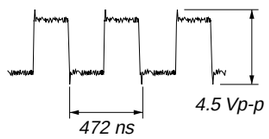

1 V/DIV, 200 ns/DIV

③ IC101 ⑦⑦ (XTAO)
(CD PLAY mode)

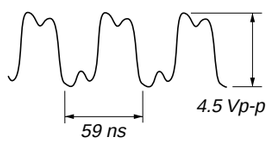

1 V/DIV, 20 ns/DIV

④ IC101 ④① (RFACO)
(CD PLAY mode)

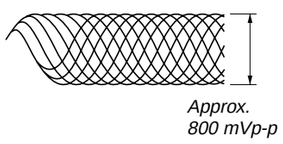

200 mV/DIV, 500 ns/DIV

– MAIN Board –

⑪ T301 ④
(REC mode)

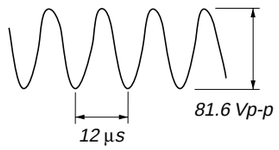

50 V/DIV, 5 µs/DIV

⑫ Q344 (Collector)
(REC mode)

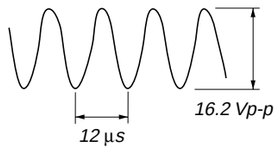

5 V/DIV, 5 µs/DIV

– PANEL Board –

㉑ IC1801 ⑪ (XT2)

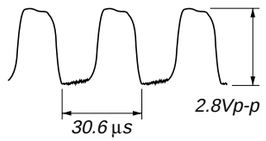

1 V/DIV, 10 µs/DIV

㉒ IC1801 ⑮ (CF2)

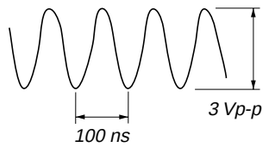

1 V/DIV, 50 ns/DIV

7-5. PRINTED WIRING BOARDS – MAIN Section –

• See page 17 for Circuit Boards Location. : Uses unleaded solder.

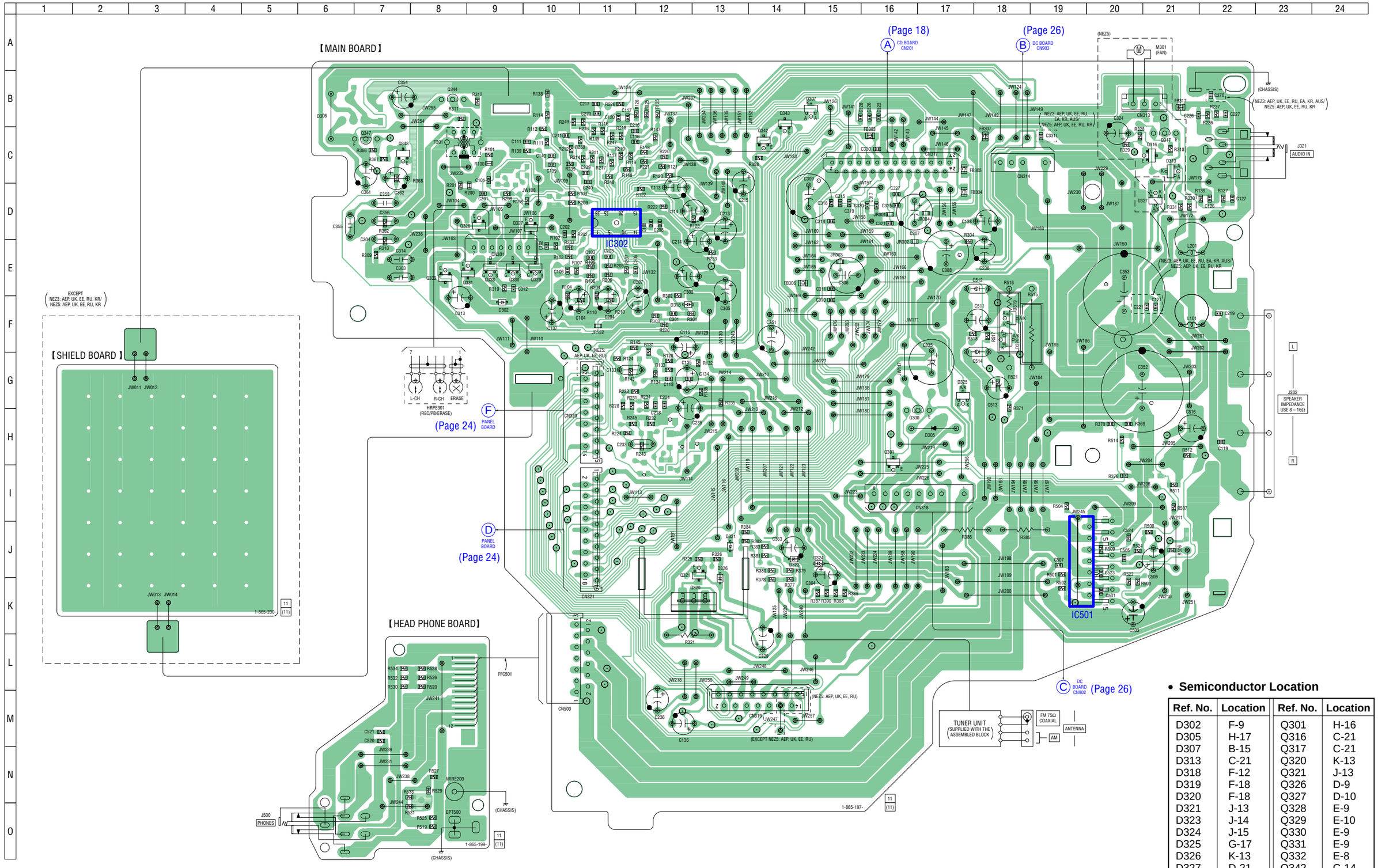

• **Semiconductor Location**

Ref. No.	Location	Ref. No.	Location
D302	F-9	Q301	H-16
D305	H-17	Q316	C-21
D307	B-15	Q317	C-21
D313	C-21	Q320	K-13
D318	F-12	Q321	J-13
D319	F-18	Q326	D-9
D320	F-18	Q327	D-10
D321	J-13	Q328	E-9
D323	J-14	Q329	E-10
D324	J-15	Q330	E-9
D325	G-17	Q331	E-9
D326	K-13	Q332	E-8
D327	D-21	Q342	C-14
		Q343	B-14
IC302	D-11	Q344	B-8
IC501	J-19	Q347	C-7
		Q348	C-7
Q300	H-17		

7-6. SCHEMATIC DIAGRAM – MAIN Section (1/2) –

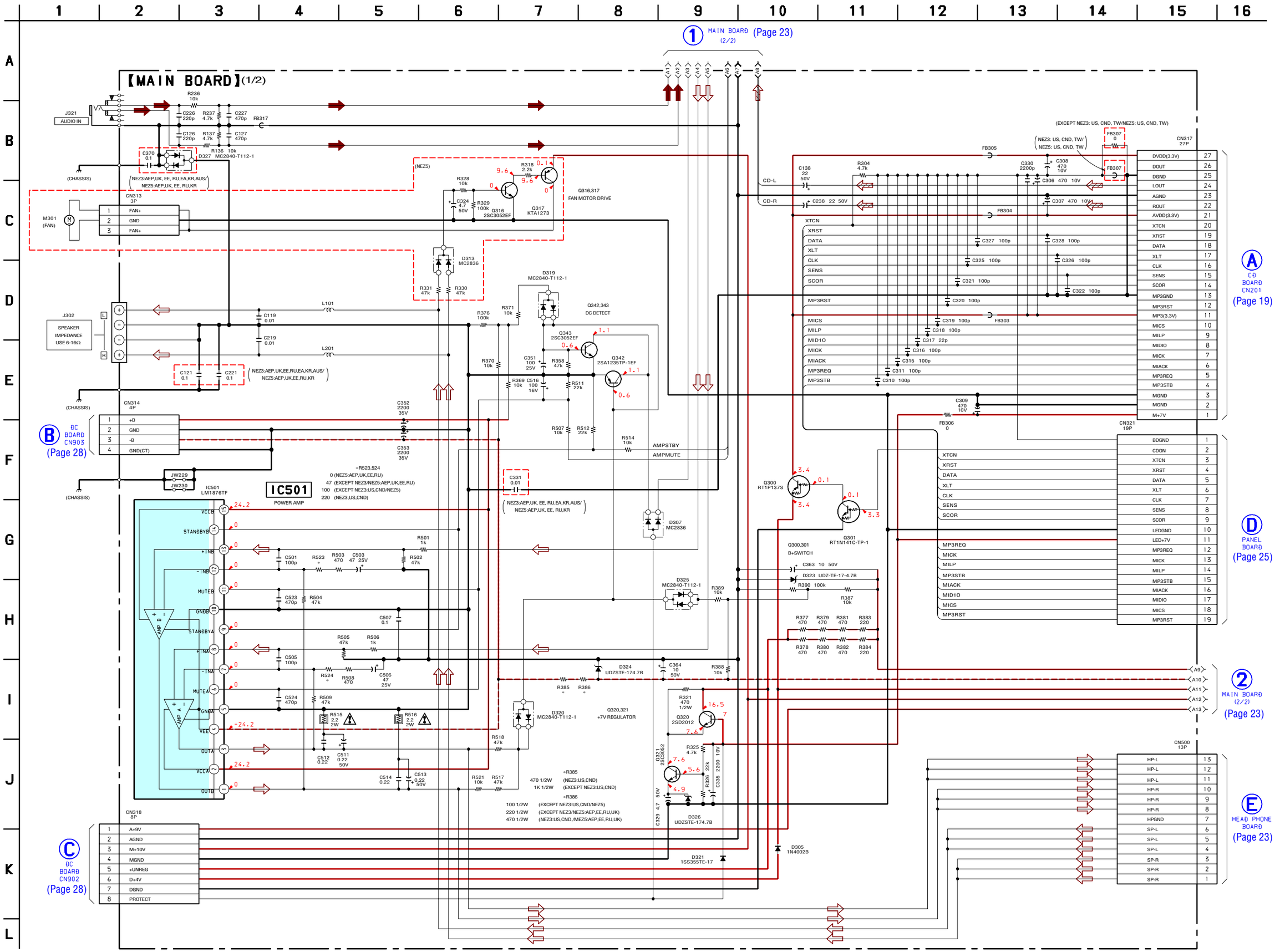

7-7. SCHEMATIC DIAGRAM – MAIN Section (2/2) –

• See page 20 for Waveforms. • See page 29 for IC Block Diagrams.

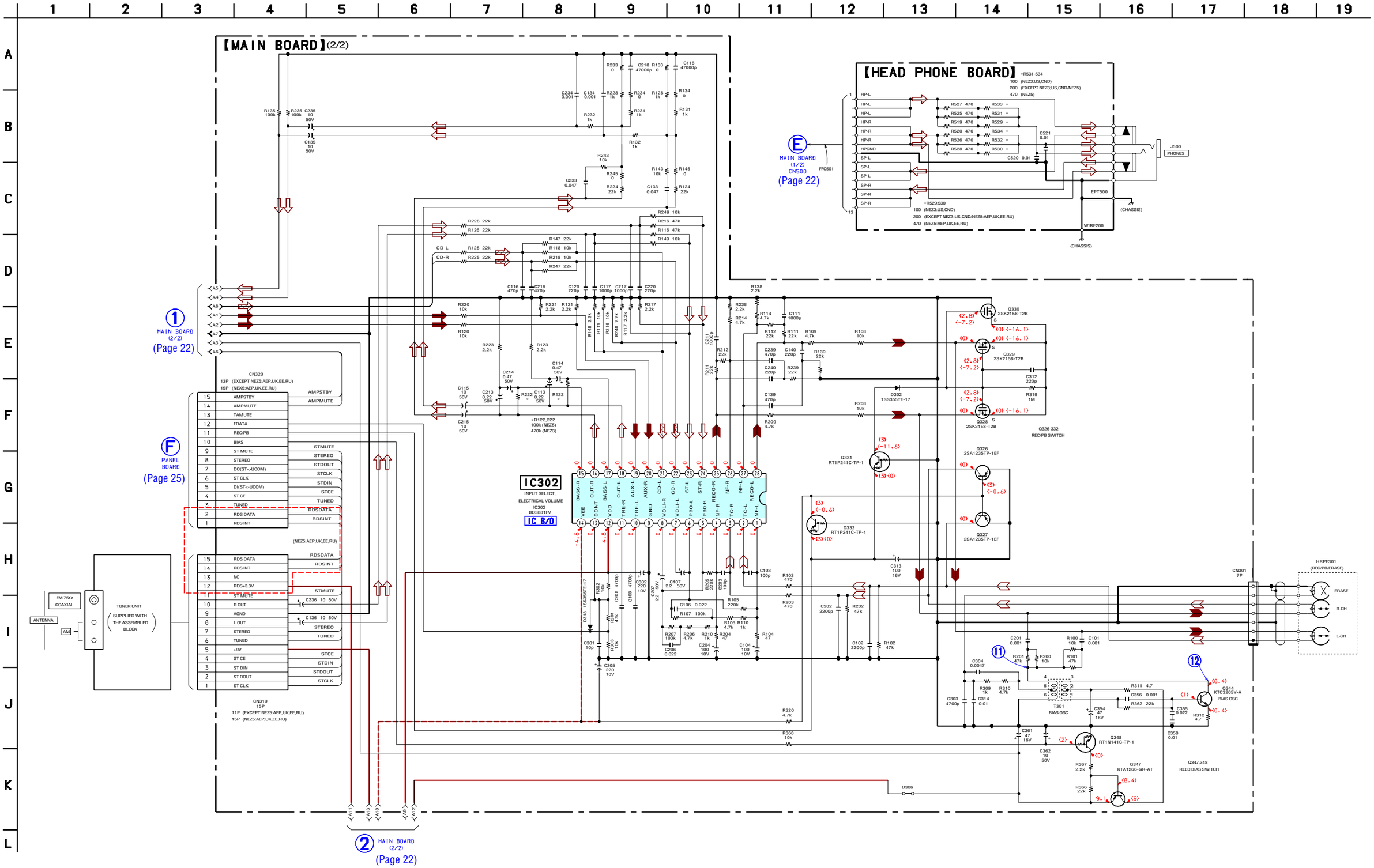

7-8. PRINTED WIRING BOARD – PANEL Board –

• See page 17 for Circuit Boards Location. : Uses unleaded solder.

• **Semiconductor Location**

Ref. No.	Location
D1801	J-8
D1804	D-5
D1805	D-5
D1806	G-11
D1808	H-3
D1809	G-13
D1898	F-13
D1899	G-8
IC1801	E-9
IC1802	F-12
IC1803	H-3
Q1801	G-3
Q1802	J-7
Q1803	J-6
Q1804	I-7
Q1805	I-6
Q1806	G-10
Q1807	C-12
Q1808	E-5
Q1809	C-11
Q1810	C-12
Q1811	C-12

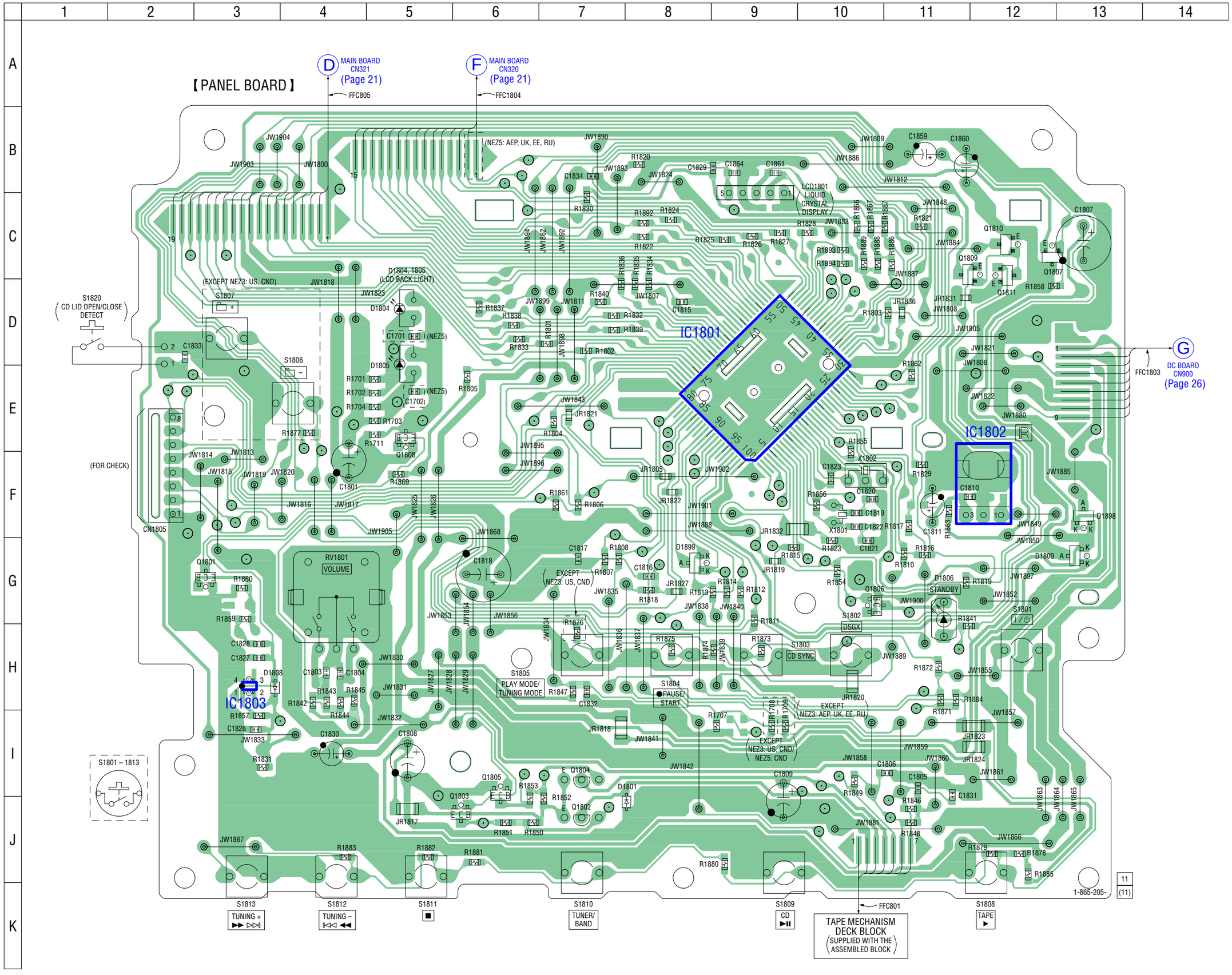

7-9. SCHEMATIC DIAGRAM – PANEL Board –

• See page 20 for Waveforms. • See page 33 for IC Pin Function Description.

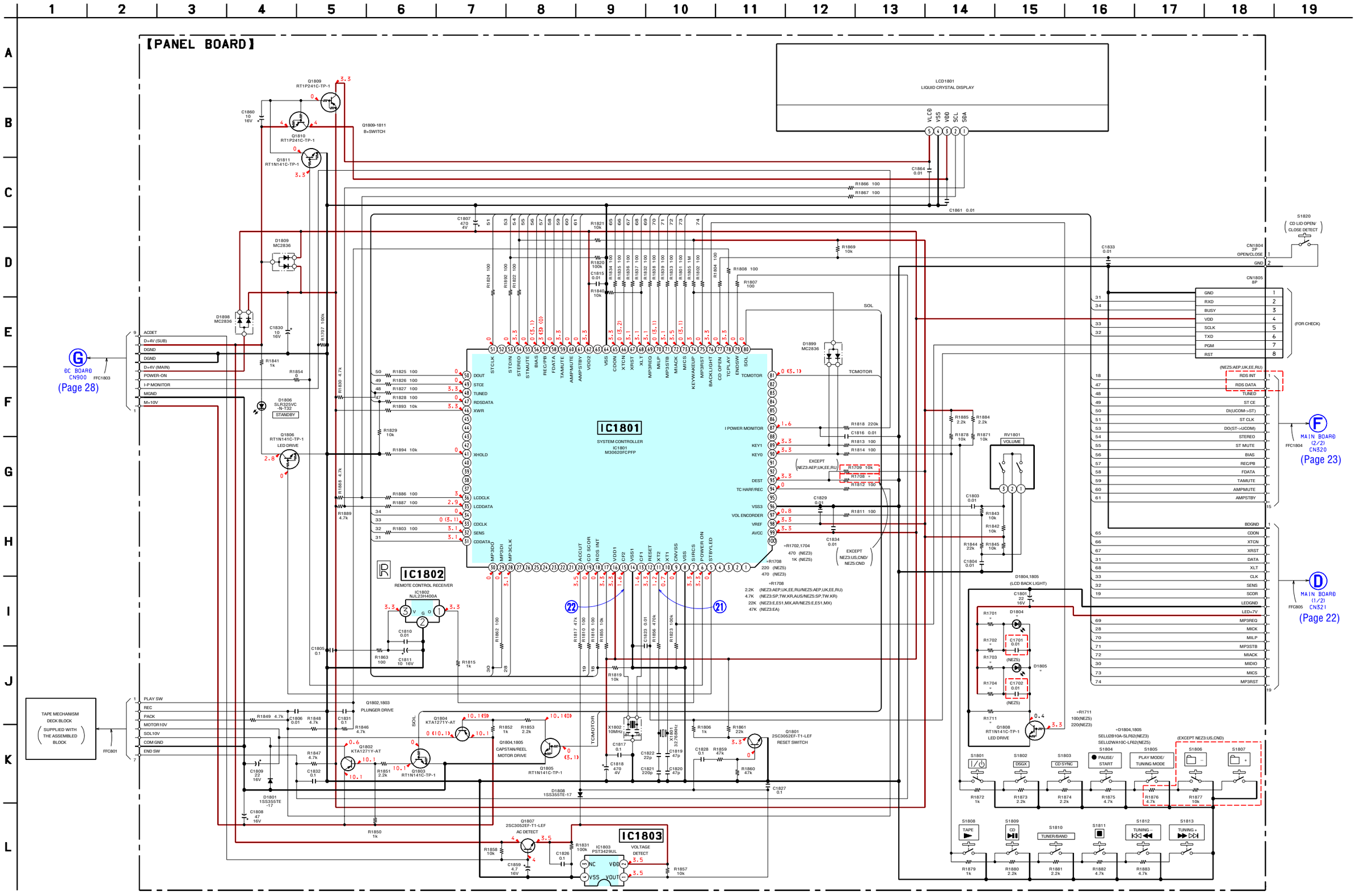

7-10. PRINTED WIRING BOARDS – DC Section –

• See page 17 for Circuit Boards Location. : Uses unleaded solder.

• **Semiconductor Location**

Ref. No.	Location
D322	J-5
D911	G-4
D912	G-4
D913	G-5
D914	G-4
D916	F-10
D917	E-10
D918	F-10
D919	G-10
D920	F-6
D926	G-8
D927	G-7
D928	H-7
D936	G-5
IC900	H-1
IC901	I-8
IC902	G-6
IC903	K-12
Q311	J-7
Q315	J-6
Q333	J-5
Q338	J-6

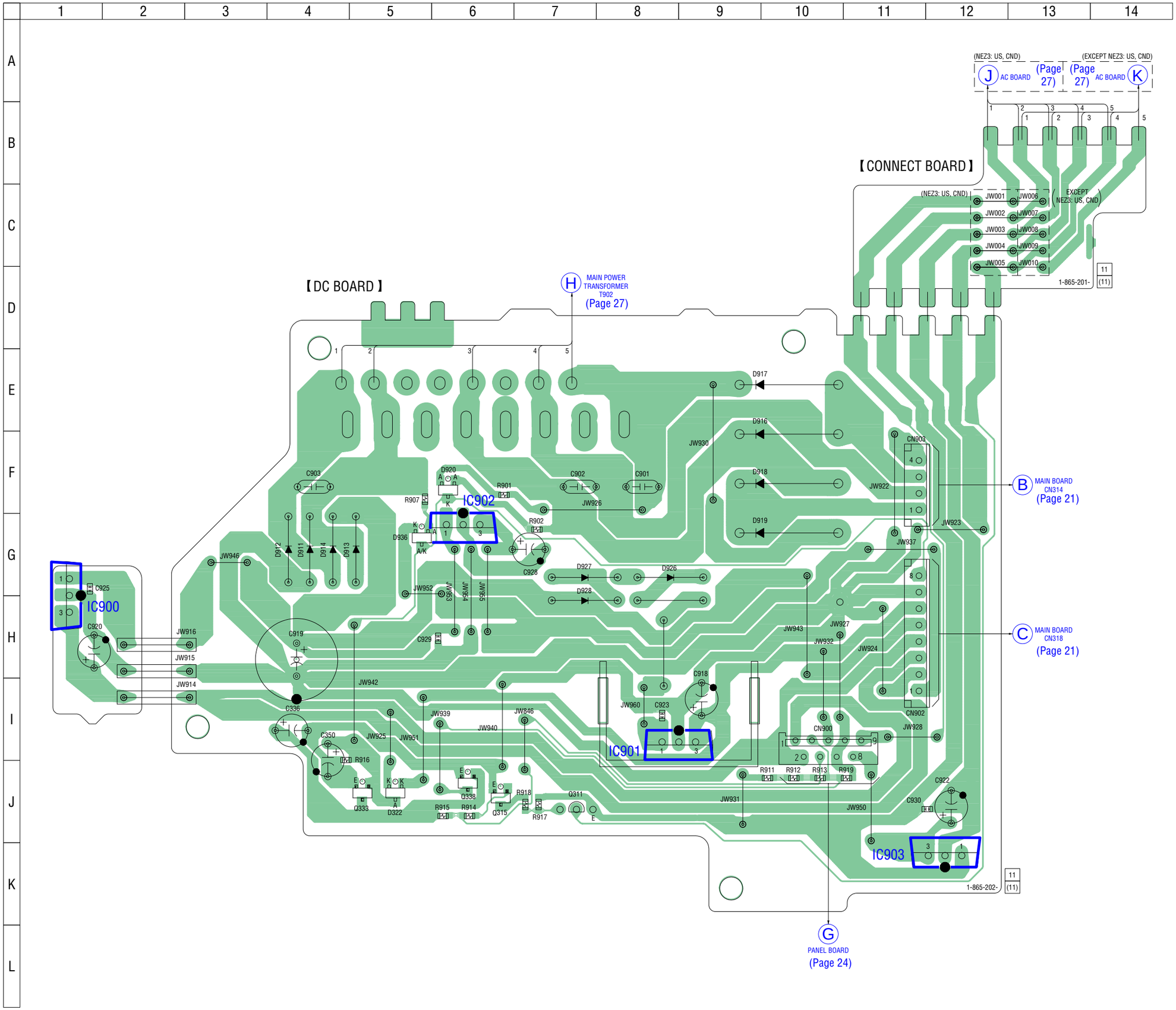

7-11. PRINTED WIRING BOARD – AC Board –

• See page 17 for Circuit Boards Location. : Uses unleaded solder.

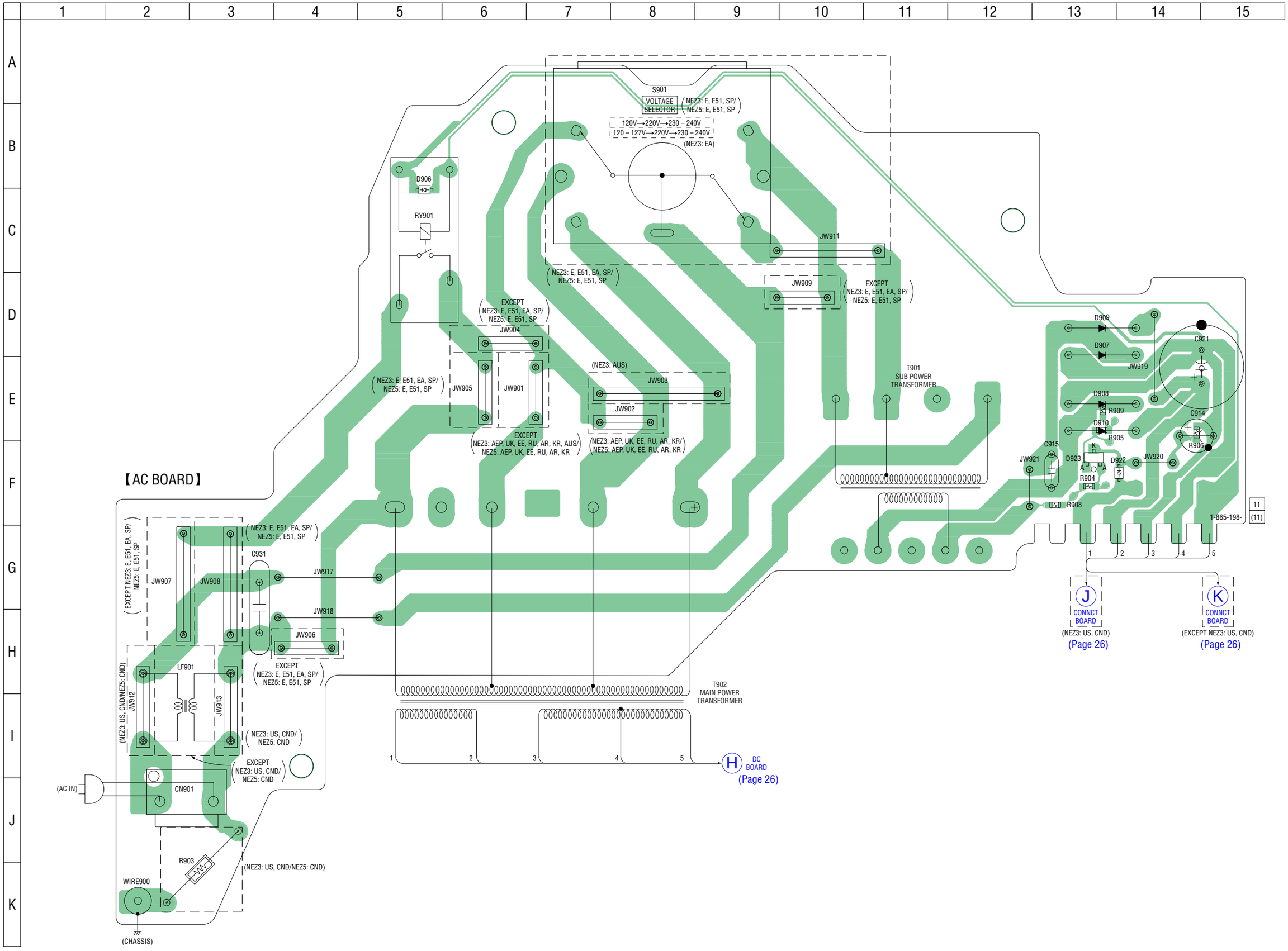

7-12. SCHEMATIC DIAGRAM – POWER SUPPLY Section –

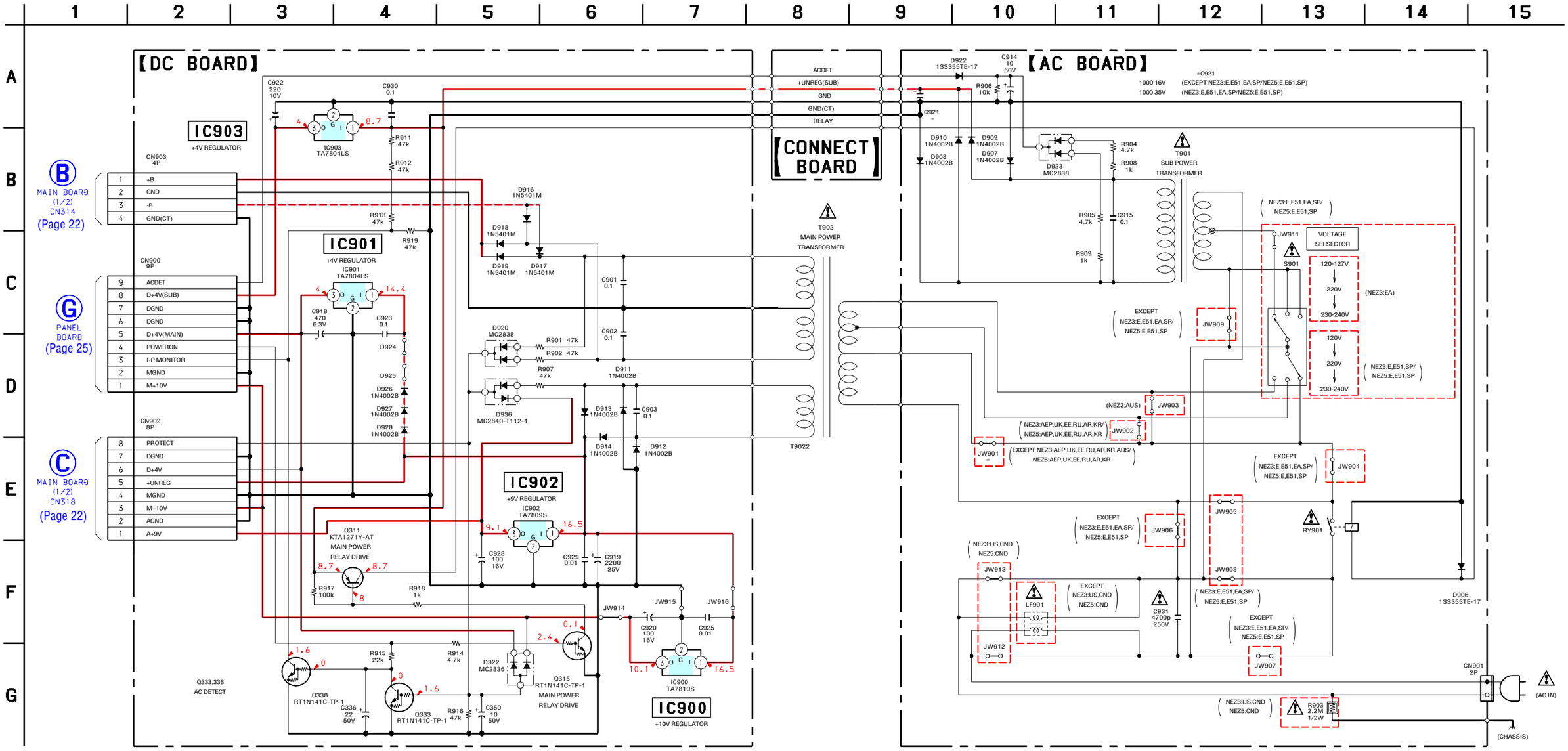

The components identified by mark ⚠ or dotted line with mark ⚠ are critical for safety. Replace only with part number specified.	Les composants identifiés par une marque ⚠ sont critiques pour la sécurité. Ne les remplacer que par une pièce portant le numéro spécifié.

- **IC Block Diagrams**

– CD Board –

IC101 CXD3059AR

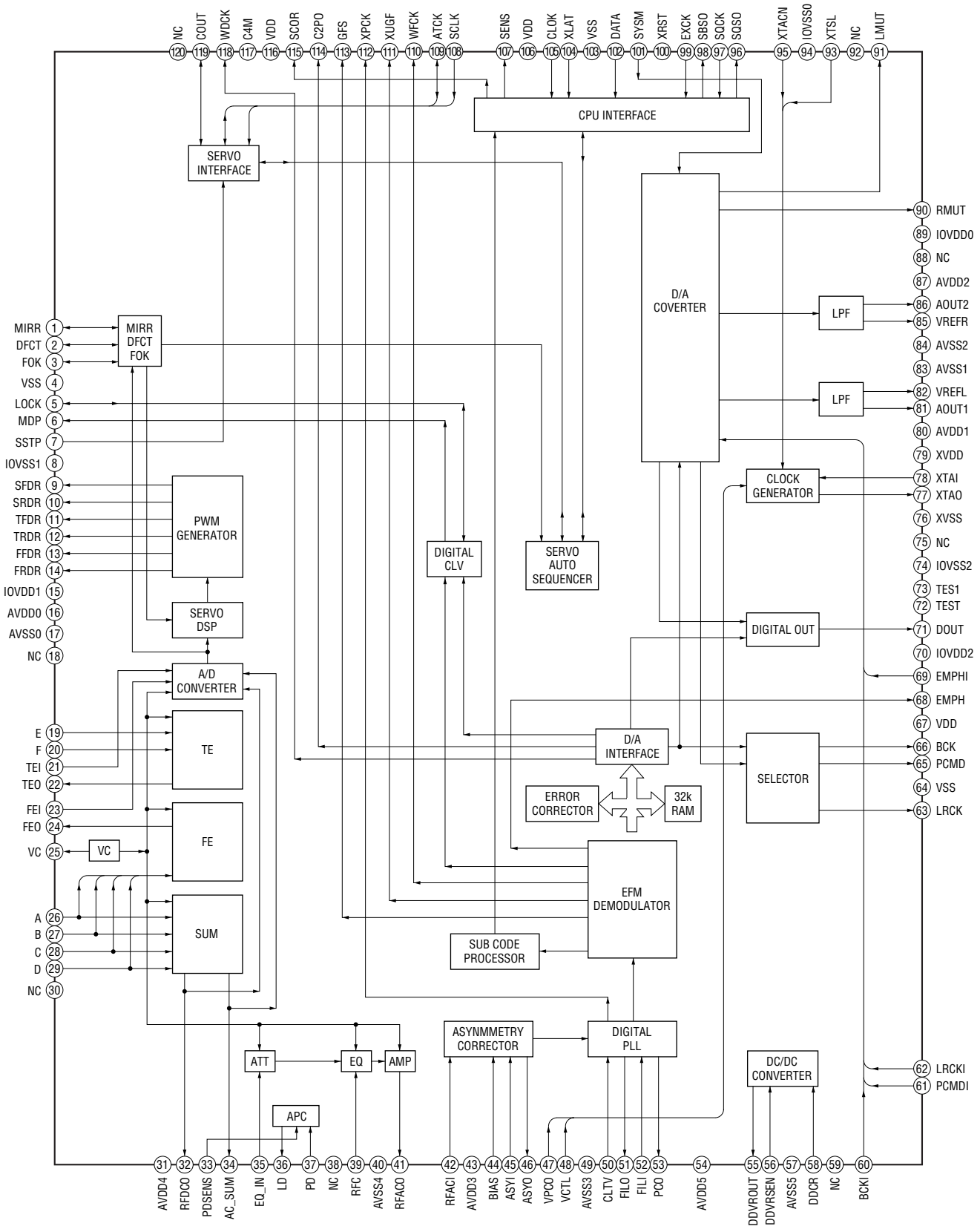

IC251 BA5947FM-E2

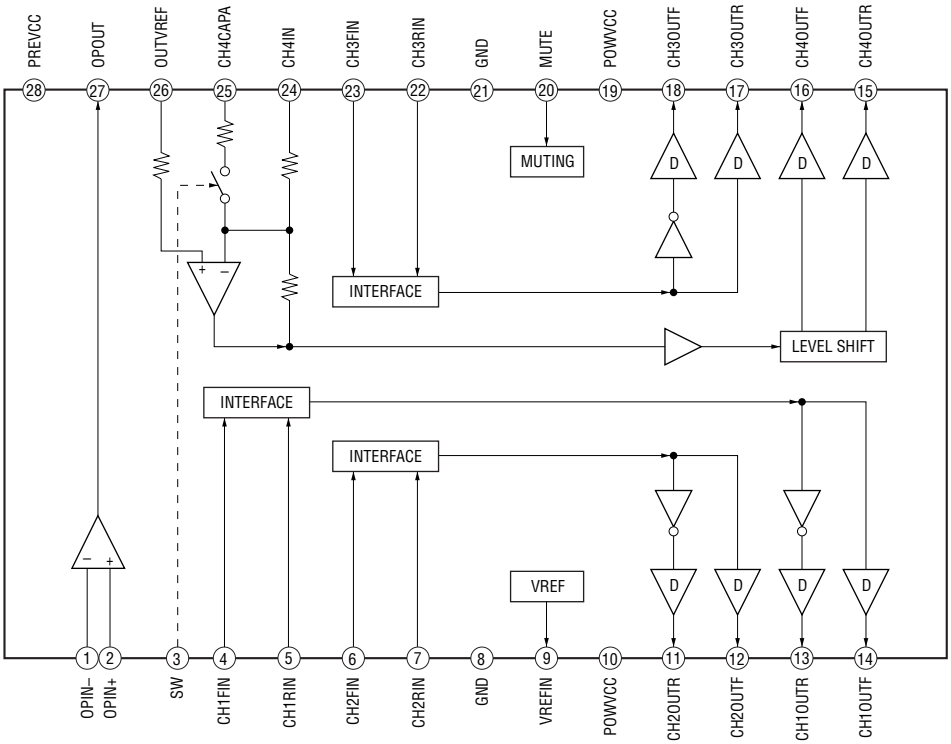

IC301 TC94A34FG-002

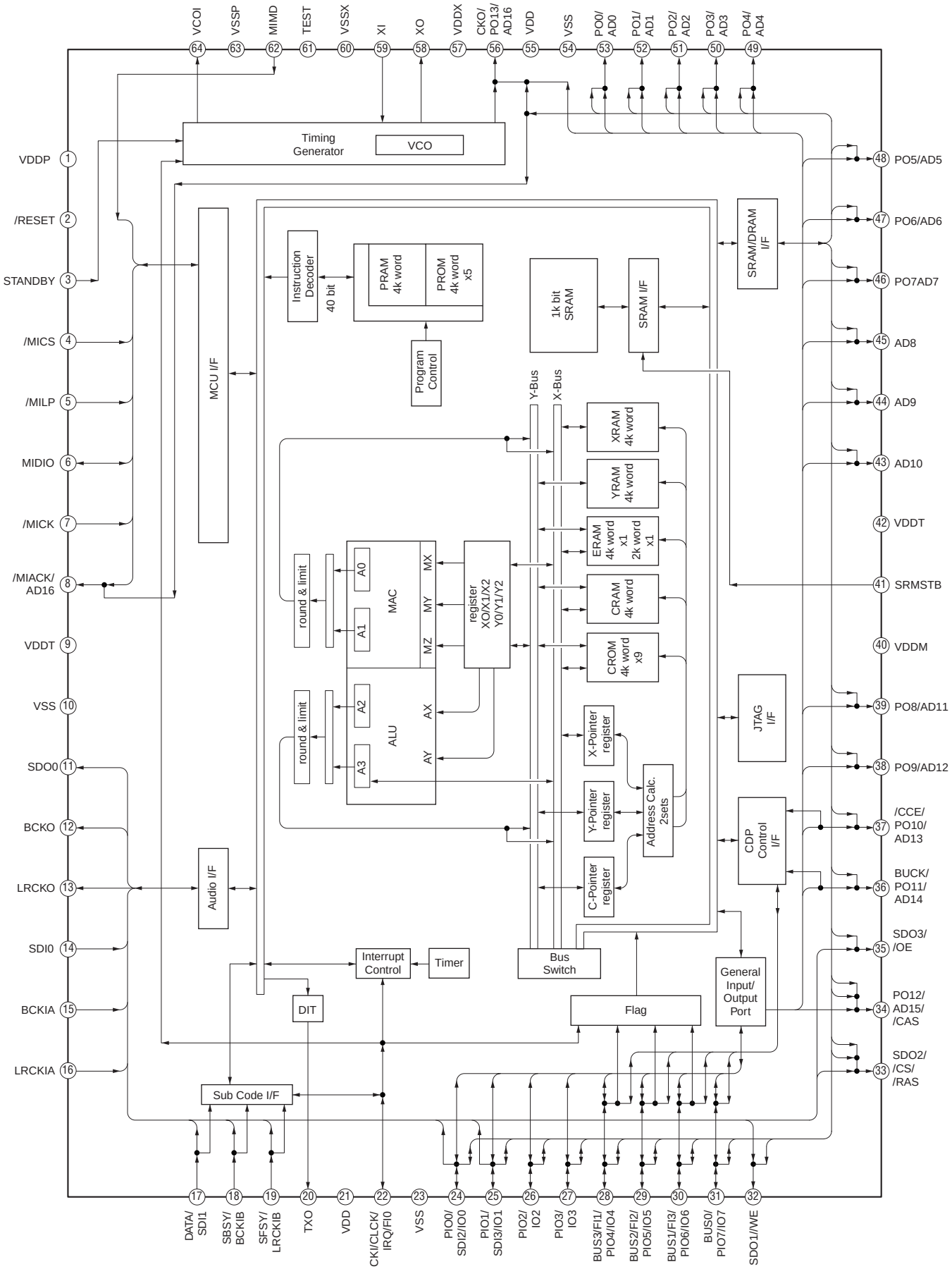

IC303 BH15FB1WG

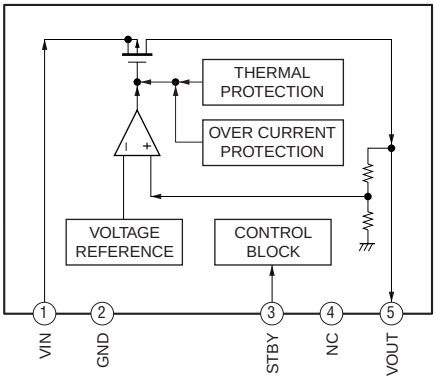

– MAIN Board –

IC302 BD3881FV

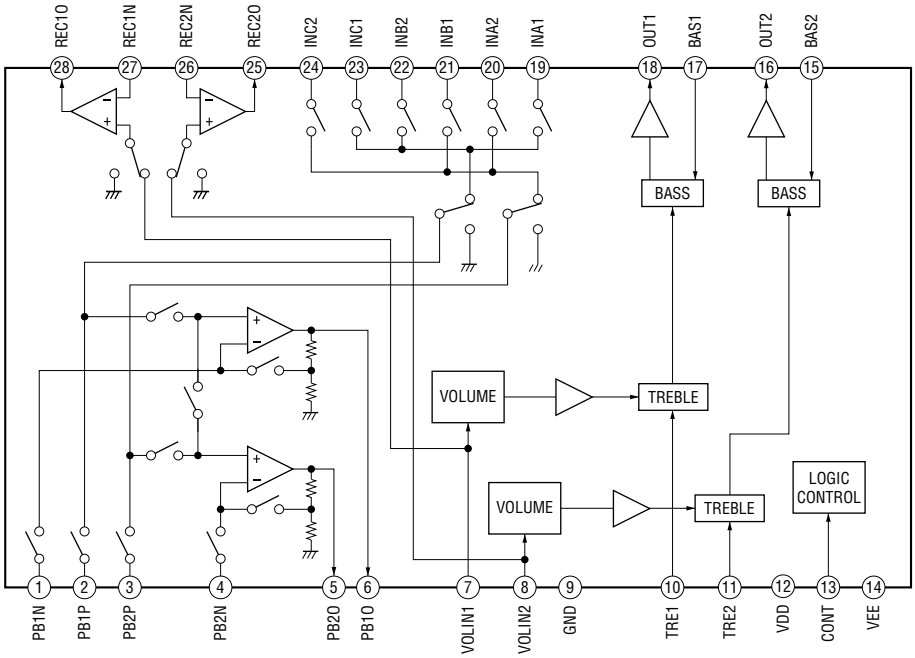

- **IC PIN FUNCTION DESCRIPITION**

PANEL BOARD IC1801 M30620FCPFP (SYSTEM CONTROLLER)

Pin No.	Pin Name	I/O	Description
1 to 4	-	-	Not used
5	STBYLED	O	LED drive signal output terminal for STANDBY indicate
6	POWER ON	O	Power relay drive signal output terminal "H": on
7	SIRCS	I	Remote control signal input from the remote control receiver
8	VSS	-	Ground terminal
9	CNVSS	-	Not used
10	XT1	I	Sub system clock input terminal (32.768 kHz)
11	XT2	O	Sub system clock output terminal (32.768 kHz)
12	RESET	I	Reset signal input from the reset switch "L": reset For several hundreds msec. after the power supply rises, "L" is input, then it changes to "H"
13	CF1	I	Main system clock input terminal (10 MHz)
14	VSS1	-	Ground terminal
15	CF2	O	Main system clock output terminal (10 MHz)
16	VDD1	-	Power supply terminal (+3.3V)
17	-	-	Not used
18	RDS INT	I	RDS serial data transfer clock signal input from the tuner unit (NEZ5: AEP, East European, Russian, UK models only)
19	CD SCOR	I	Subcode sync (S0+S1) detection signal input from the CD DSP
20	ACCUT	I	Power down detection signal input terminal "L": power down, normally : "H"
21 to 27	-	-	Not used
28	MP3CLK	O	Serial data transfer clock signal output to the MP3 decoder
29	MP3DI	I	Serial data input from the MP3 decoder
30	MP3DO	O	Serial data output to the MP3 decoder
31	CDDATA	O	Serial data output to the CD DSP
32	SENS	I	Internal status (SENSE) signal input from the CD DSP
33	CDCLK	O	Serial data transfer clock signal output to the CD DSP
34	-	-	Not used
35	LCDDATA	O	Serial data output to the liquid crystal display
36	LCDCLK	O	Serial data transfer clock signal output to the liquid crystal display
37 to 40	-	-	Not used
41	XHOLD	-	Not used
42 to 45	-	-	Not used
46	XWR	-	Not used
47	RDSDATA	I	RDS serial data input from the tuner unit (NEZ5: AEP, East European, Russian, UK models only)
48	TUNED	I	Tuning detection signal input from the tuner unit
49	STCE	O	Chip enable signal output to the tuner unit
50	DOUT	O	Serial data output to the tuner unit
51	STCLK	O	serial data transfer clock signal output to the tuner unit
52	-	-	Not used
53	STDIN	I	Serial data input from the tuner unit
54	STEREO	I	FM stereo detection signal input from the tuner unit
55	STMUTE	O	Tuner muting on/off control signal output to the tuner unit
56	BIAS	O	Recording bias on/off selection signal output terminal "H": bias on, "L": bias off
57	REC/PB	O	Recording/playback selection signal output terminal "H": playback mode, "L": recording mode
58	FDATA	O	Serial data output to the electrical volume

Pin No.	Pin Name	I/O	Description
59	TAMUTE	O	Line muting on/off control signal output terminal Not used
61	AMPSTBY	O	Standby control signal output to the power amplifier
62	VDD2	-	Power supply terminal (+3.3V)
63	-	-	Not used
64	VSS	-	Ground terminal
65	CDON	O	Power on/off control signal output for the CD mechanism section
66	XTCN	O	Oscillation circuit control signal output to the CD DSP "H": auto oscillation, "L": oscillation off
67	XRST	O	Reset signal output to the CD DSP
68	XLT	O	Serial data latch pulse output to the CD DSP
69	MP3REQ	I	Request signal input from the MP3 decoder
70	MILP	O	Serial data latch pulse output to the MP3 decoder
71	MP3STB	O	Standby control signal output to the MP3 decoder
72	MIACK	I	Acknowledge signal input from the MP3 decoder
73	MICS	O	Chip select signal output to the MP3 decoder
74	KEYWAKEUP	I	Key interruption processing start signal input terminal
75	MP3RST	O	Reset signal output to the MP3 decoder
76	BACKLIGHT	O	LED drive signal output terminal for LCD back light
77	CD OPEN	I	CD lid open/close detection switch input terminal
78	TCPLAY	I	PLAY switch signal input from the tape mechanism deck
79	ENDSW	I	END switch signal input from the tape mechanism deck
80	SOL	O	Trigger plunger on/off control signal output terminal "H": plunger on
81	TCMOTOR	O	Capstan/reel motor on/off control signal output terminal "H": motor on
82 to 86	-	-	Not used
87	I POWER MONITOR	I	Power monitor input terminal
88	-	-	Not used
89, 90	KEY1, KEY0	I	Front panel key input terminal (A/D input)
91, 92	-	-	Not used
93	DEST	I	Model destination setting terminal
94	TC HARF/REC	I	Recording-proof claw (forward/reverse) detect switch and cassette in detect switch input terminal
95	-	-	Not used
96	VSS3	-	Ground terminal
97	VOL ENCORDER	I	Dial pulse input of the rotary encoder (for VOLUME control)
98	VREF	I	Reference voltage (+3.3V) input terminal
99	AVCC	-	Power supply terminal (+3.3V)
100	-	-	Not used

SECTION 8
EXPLODED VIEWS

NOTE:

- -XX and -X mean standardized parts, so they may have some difference from the original one.
- Color Indication of Appearance Parts
  Example:
  KNOB, BALANCE (WHITE) . . . (RED)
  ↑ Parts Color ↑ Cabinet's Color
- Abbreviation
  AR : Argentina model E51 : Chirean and Peruvian model KR : Korean model SP : Singapore model
  AUS : Australian model EA : Saudi Arabia model MX : Mexican model TW : Taiwan model
  CND : Canadian model EE : East European model RU : Russian model
- Items marked "*" are not stocked since they are seldom required for routine service. Some delay should be anticipated when ordering these items.
- The mechanical parts with no reference number in the exploded views are not supplied.
- Accessories are given in the last of the electrical parts list.

The components identified by mark ⚠ or dotted line with mark ⚠ are critical for safety.
Replace only with part number specified.

Les composants identifiés par une marque ⚠ sont critiquens pour la sécurité.
Ne les remplacer que par une pièce portant le numéro spécifié.

8-1. CABINET SECTION

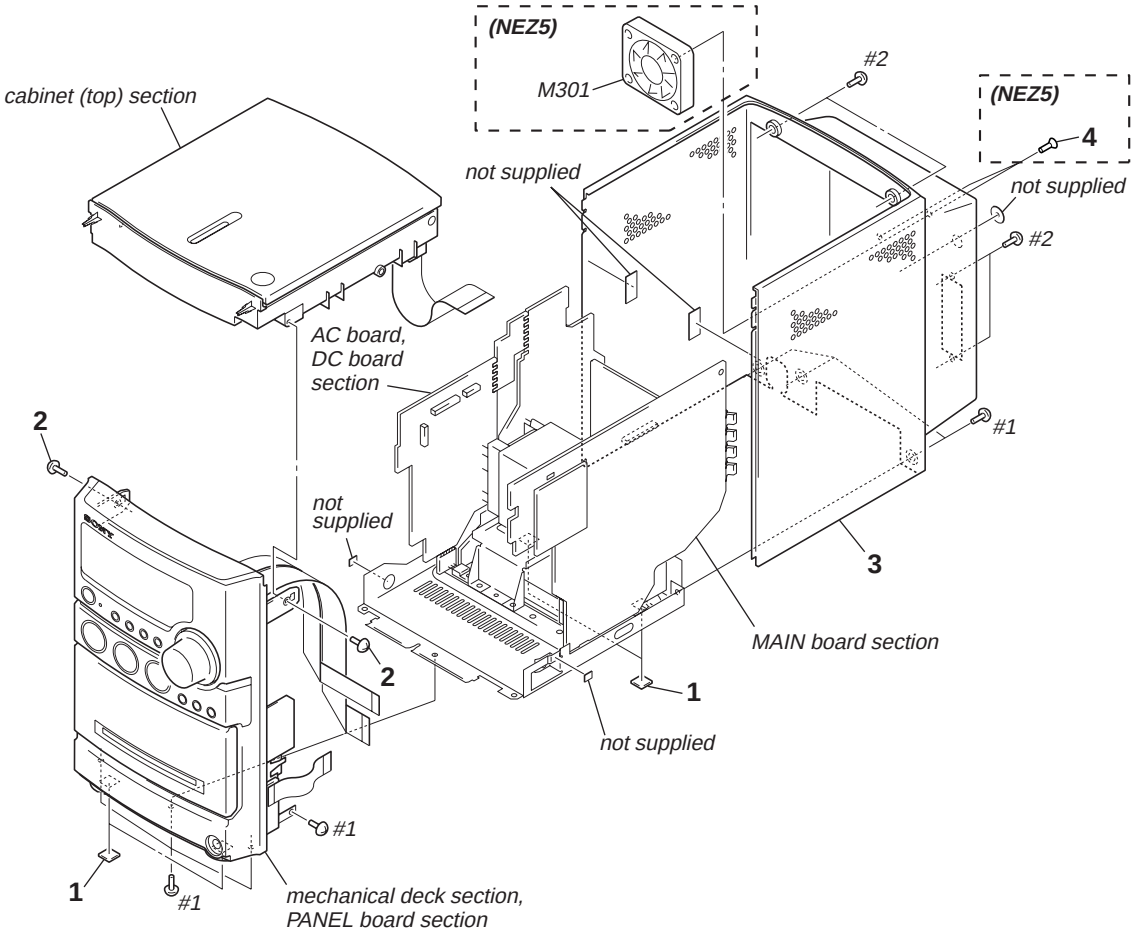

Ref. No.	Part No.	Description	Remark
1	4-247-752-01	FOOT, RUBBER	
2	4-951-620-01	SCREW (2.6X8), +BVTP	
3	2-581-397-02	CABINET (NEZ3: US)	
3	2-581-397-12	CABINET (NEZ3: CND)	
3	2-581-399-02	CABINET (NEZ3: AEP, UK, EE, RU, MX, TW, AR, KR, AUS)	
3	2-581-399-12	CABINET (NEZ3: E, E51, SP)	
3	2-581-399-22	CABINET (NEZ3: EA)	
3	2-581-402-22	CABINET (SILVER) (NEZ5: CND, AEP, UK, EE, RU, MX, TW, AR, KR)	
3	2-581-402-32	CABINET (WHITE) (NEZ5: KR)	
3	2-581-402-42	CABINET (SILVER) (NEZ5: E, E51, SP)	
3	2-581-402-52	CABINET (WHITE) (NEZ5: SP)	
4	4-671-016-01	SCREW (FAN) (NEZ5)	
M301	1-787-103-11	FAN, DC (NEZ5)	
#1	7-685-646-79	SCREW +BVTP 3X8 TYPE2 N-S	
#2	7-685-647-79	SCREW +BVTP 3X10 TYPE2 N-S	

8-2. MECHANICAL DECK SECTION

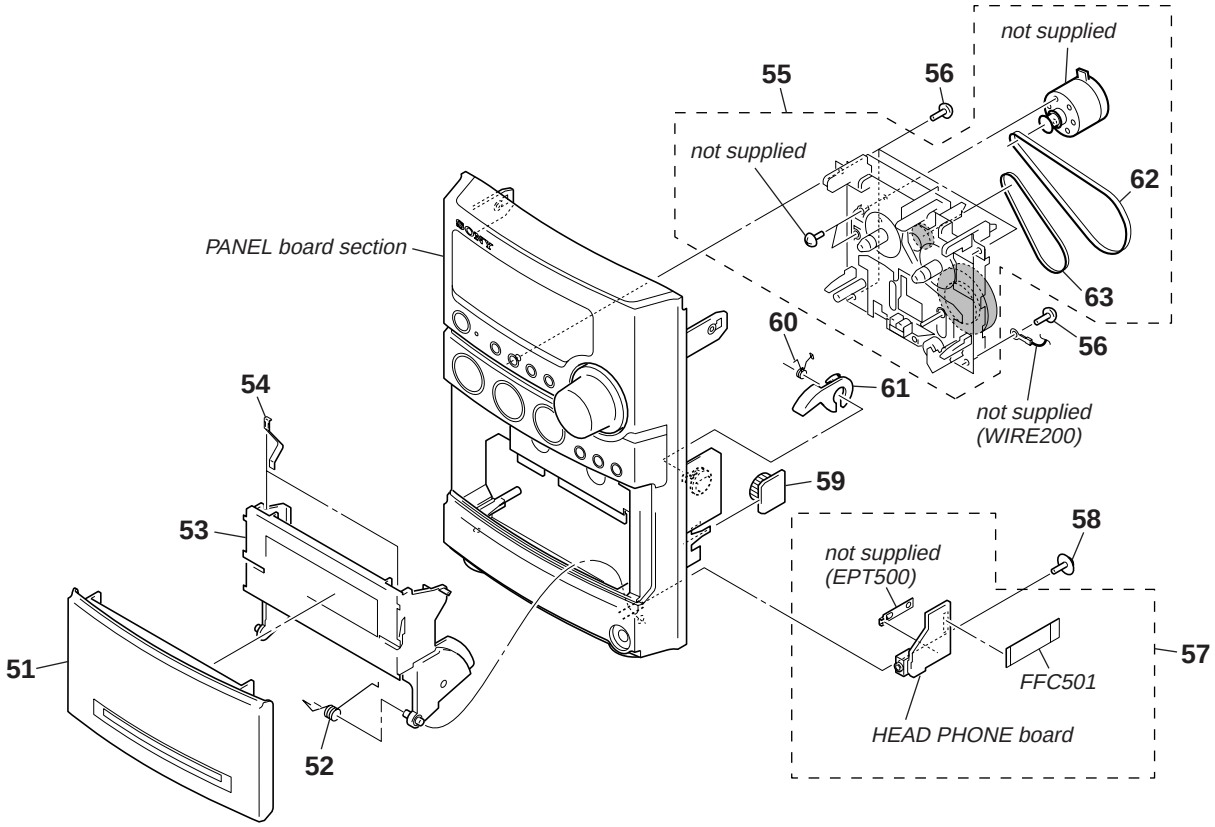

Ref. No.	Part No.	Description	Remark
51	X-2048-718-1	LID ASSY, CASSETTE (SILVER)	
51	X-2050-327-1	LID ASSY, CASSETTE (WHITE) (NEZ5)	
52	4-245-034-01	SPRING (CASSETTE)	
53	2-581-395-01	HOLDER (CASSETTE)	
54	4-238-631-01	TAPE SPRING	
55	1-796-352-71	DECK, MECHANICAL (CMAL5Z231)	
56	4-951-620-01	SCREW (2.6X8), +BVTP	
57	A-1090-813-A	HEAD PHONE BOARD, COMPLETE	(NEZ3: US, CND)
57	A-1090-905-A	HEAD PHONE BOARD, COMPLETE (NEZ5: CND)	
57	A-1095-915-A	HEAD PHONE BOARD, COMPLETE	(NEZ3: AEP, UK, EE, RU, KR)
57	A-1095-924-A	HEAD PHONE BOARD, COMPLETE	(NEZ3: E, E51, EA, MX, SP, TW, AR, AUS)
57	A-1095-934-A	HEAD PHONE BOARD, COMPLETE	(NEZ5: AEP, UK, EE, RU)
57	A-1095-972-A	HEAD PHONE BOARD, COMPLETE	(NEZ5: E, E51, MX, TW, AR, SP)
57	A-1102-061-A	HEAD PHONE BOARD, COMPLETE (NEZ5: KR)	
58	4-933-134-11	SCREW (+PTPWH M2.6X8)	
59	4-224-104-41	DAMPER	
60	4-231-841-01	SPRING (HEART CAM-B)	
61	4-231-825-01	CAM (B), HEART	
62	2-655-725-01	BELT (MAIN)	
63	2-655-726-01	BELT (MO), F/R	
FFC501	1-830-584-12	WIRE (FLAT TYPE) (13 CORE)	

8-3. PANEL BOARD SECTION

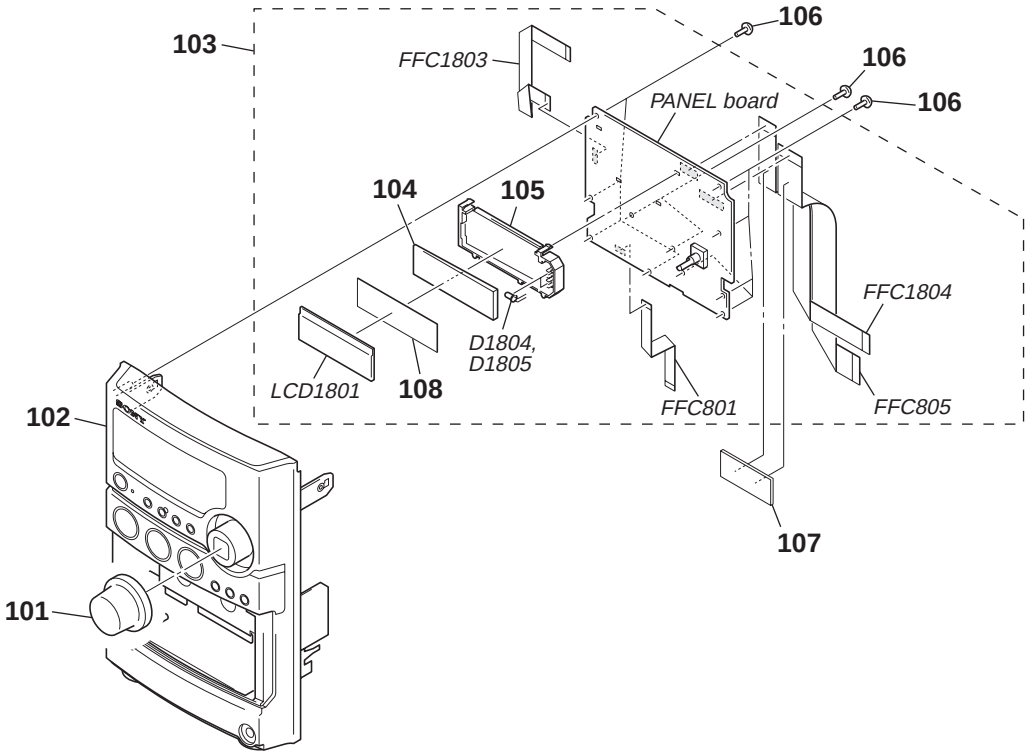

Ref. No.	Part No.	Description	Remark
101	2-581-385-02	KNOB (VOL) (NEZ3)	
101	2-581-385-11	KNOB (VOL) (NEZ5)	
102	X-2048-717-1	PANEL ASSY, FRONT (NEZ3: US)	
102	X-2048-755-1	PANEL ASSY, FRONT (NEZ3: AEP, UK, E, E51, EA, EE, RU, MX, SP, TW, AR, KR, AUS)	
102	X-2050-120-1	PANEL ASSY, FRONT (SILVER) (NEZ5: AEP, UK, EE, RU)	
102	X-2050-205-1	PANEL ASSY, FRONT (SILVER) (NEZ5: CND, E, E51, MX, TW, AR, SP, KR)	
102	X-2050-273-1	PANEL ASSY, FRONT (SILVER) (NEZ3: CND)	
102	X-2050-326-1	PANEL ASSY, FRONT (WHITE) (NEZ5: SP, KR)	
103	A-1095-891-A	PANEL BOARD, COMPLETE (NEZ3: US, CND)	
103	A-1095-895-A	PANEL BOARD, COMPLETE (NEZ3: AEP, UK, EE, RU)	
103	A-1095-922-A	PANEL BOARD, COMPLETE (NEZ3: SP, TW, KR, AUS)	
103	A-1095-933-A	PANEL BOARD, COMPLETE (NEZ5: AEP, UK, EE, RU)	
103	A-1095-971-A	PANEL BOARD, COMPLETE (for SILVER) (NEZ5: SP, TW, KR)	
103	A-1098-688-A	PANEL BOARD, COMPLETE (NEZ3: E, E51, MX, AR)	
103	A-1098-754-A	PANEL BOARD, COMPLETE (NEZ5: E, E51, MX, AR)	
103	A-1099-172-A	PANEL BOARD, COMPLETE (NEZ3: EA)	
103	A-1099-813-A	PANEL BOARD, COMPLETE (NEZ5: CND)	
103	A-1099-837-A	PANEL BOARD, COMPLETE (for WHITE) (NEZ5: SP, KR)	
104	2-581-391-01	PLATE, LIGHT GUIDE	
105	2-594-335-01	HOLDER (LCD-C)	
106	4-951-620-01	SCREW (2.6X8), +BVTP	
107	2-591-582-01	PLATE (FRONT FFC), PROTECTION	
108	2-586-988-02	SHEET (LCD), DIFFUSION	
D1804	6-501-139-01	LED SELU2B10A-SLF62 (LCD BACK LIGHT)	(NEZ3)
D1804	6-501-138-01	LED SELU2WA10C-LF62 (LCD BACK LIGHT)	(NEZ5)
D1805	6-501-138-01	LED SELU2WA10C-LF62 (LCD BACK LIGHT)	(NEZ5)
D1805	6-501-139-01	LED SELU2B10A-SLF62 (LCD BACK LIGHT)	(NEZ3)
FFC801	1-830-583-11	WIRE (FLAT TYPE) (7 CORE)	
FFC805	1-830-582-12	WIRE (FLAT TYPE) (19 CORE)	
FFC1803	1-830-579-11	WIRE (FLAT TYPE) (9 CORE)	
FFC1804	1-830-580-12	WIRE (FLAT TYPE) (15 CORE) (NEZ5: AEP, UK, EE, RU)	
FFC1804	1-830-581-12	WIRE (FLAT TYPE) (13 CORE) (EXCEPT NEZ5: AEP, UK, EE, RU)	
LCD1801	1-805-843-11	DISPLAY PANEL, LIQUID CRYSTAL (NEZ3/NEZ5 (WHITE): SP, KR)	
LCD1801	1-805-843-21	DISPLAY PANEL, LIQUID CRYSTAL (NEZ5 (SILVER): CND, AEP, UK, E, E51, EE, RU, MX, TW, AR, SP, KR)	

8-4. CABINET (TOP) SECTION

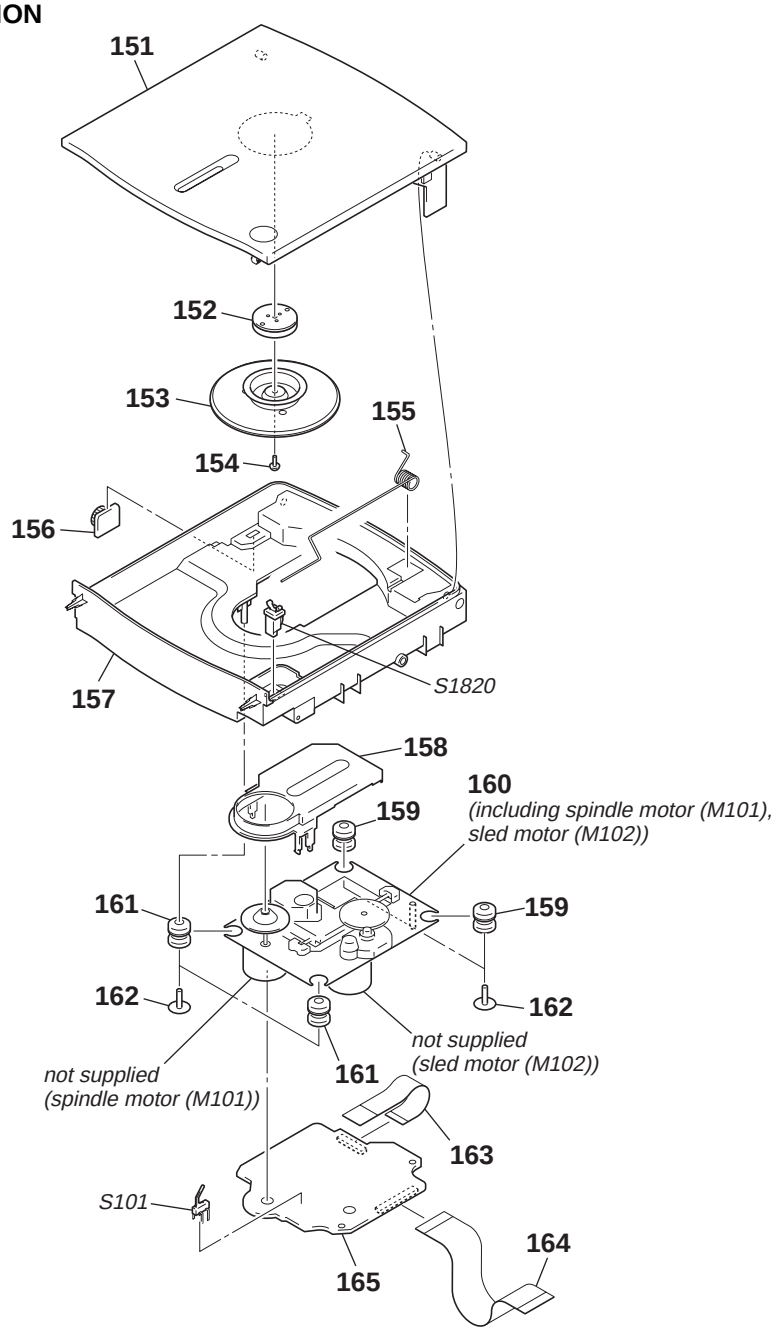

The components identified by mark ⚠ or dotted line with mark ⚠ are critical for safety. Replace only with part number specified.	Les composants identifiés par une marque ⚠ sont critiques pour la sécurité. Ne les remplacer que par une pièce portant le numéro spécifié.

Ref. No.	Part No.	Description	Remark
151	X-2048-962-1	LID ASSY, CD (WHITE) (NEZ5)	
151	X-2050-124-1	LID ASSY, CD (SILVER)	
152	1-452-899-11	MAGNET	
153	3-019-395-01	PLATE, CHUCKING	
154	3-253-143-01	SCREW (B2.6), (+) P TAPPING	
155	2-581-393-01	SPRING (CD)	
156	4-242-171-01	DAMPER 150N	
157	2-581-388-01	CABINET (TOP) (SILVER) (NEZ3: US)	
157	2-581-388-11	CABINET (TOP) (SILVER) (EXCEPT NEZ3: US)	
157	2-581-388-31	CABINET (TOP) (WHITE) (NEZ5)	
158	4-247-493-01	COVER, CD	
159	3-931-379-21	RUBBER, VIBRATION PROOF (RED)	
⚠160	8-820-221-01	OPTICAL PICK-UP BLOCK KSM-213EDP/C2NP (Including spindle motor (M101), sled motor (M102))	
161	3-931-379-31	RUBBER, VIBRATION PROOF (GREEN)	
162	3-921-725-01	SCREW (2.6X10), +PWH	
163	1-827-992-11	WIRE (FLAT TYPE) (16 CORE)	
164	1-830-585-11	WIRE (FLAT TYPE) (27 CORE)	
165	A-1127-998-A	CD BOARD, COMPLETE	
S101	1-771-853-11	SWITCH, DETECTION (LIMIT)	
S1820	1-692-960-21	SWITCH, PUSH (1 KEY) (CD LID OPEN/CLOSE DETECT)	

8-5. MAIN BOARD SECTION

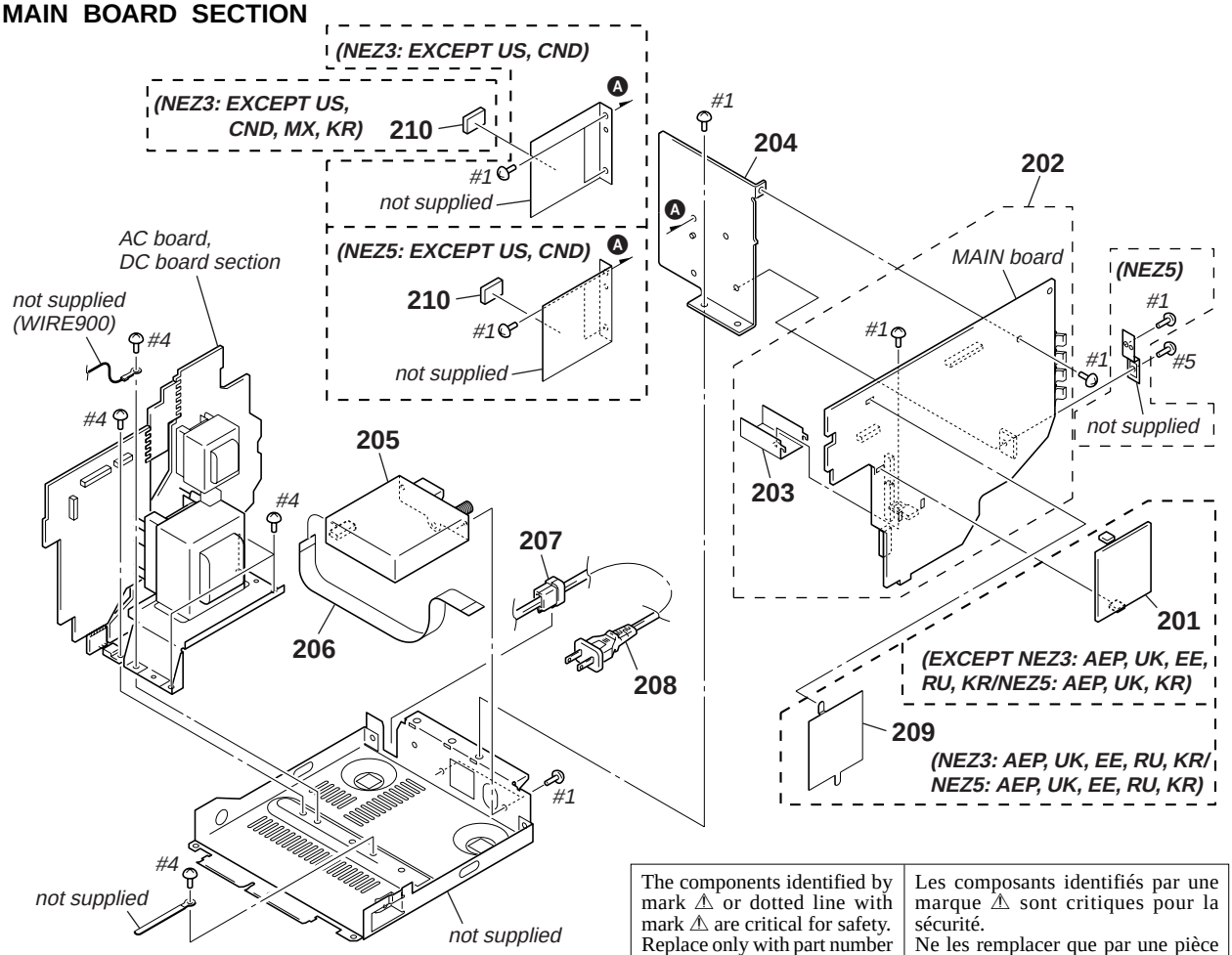

The components identified by mark ⚠ or dotted line with mark ⚠ are critical for safety. Replace only with part number specified.	Les composants identifiés par une marque ⚠ sont critiques pour la sécurité. Ne les remplacer que par une pièce portant le numéro spécifié.

Ref. No.	Part No.	Description	Remark
201	A-1101-746-A	SHIELD BOARD, COMPLETE	(EXCEPT NEZ3: AEP, UK, EE, RU, KR/ NEZ5: AEP, UK, EE, RU, KR)
202	A-1095-890-A	MAIN BOARD, COMPLETE (NEZ3: US, CND)	
202	A-1095-894-A	MAIN BOARD, COMPLETE	(NEZ3: AEP, UK, EE, RU)
202	A-1095-921-A	MAIN BOARD, COMPLETE (NEZ3: SP)	
202	A-1095-929-A	MAIN BOARD, COMPLETE (NEZ5: CND)	
202	A-1095-932-A	MAIN BOARD, COMPLETE	(NEZ5: AEP, UK, EE, RU)
202	A-1095-970-A	MAIN BOARD, COMPLETE	(NEZ5: E, E51, SP, AR)
202	A-1098-686-A	MAIN BOARD, COMPLETE (NEZ3: MX)	
202	A-1098-752-A	MAIN BOARD, COMPLETE (NEZ5: TW)	
202	A-1098-904-A	MAIN BOARD, COMPLETE (NEZ3: AR)	
202	A-1098-933-A	MAIN BOARD, COMPLETE (NEZ3: AUS)	
202	A-1098-968-A	MAIN BOARD, COMPLETE (NEZ3: TW)	
202	A-1099-033-A	MAIN BOARD, COMPLETE (NEZ3: KR)	
202	A-1099-078-A	MAIN BOARD, COMPLETE (NEZ3: E, E51)	
202	A-1099-170-A	MAIN BOARD, COMPLETE (NEZ3: EA)	
202	A-1101-169-A	MAIN BOARD, COMPLETE (NEZ5: KR)	
202	A-1119-015-A	MAIN BOARD, COMPLETE (NEZ5: MX)	
203	2-586-961-01	HEAT SINK	
204	2-581-392-01	HEAT SINK (NEZ3: US, CND)	
204	2-581-392-11	HEAT SINK	(NEZ3: AEP, UK, E, E51, EA, EE, RU, MX, SP, TW, AR, KR, AUS)
204	2-581-392-21	HEAT SINK (NEZ5)	
205	1-693-625-11	TUNER UNIT (NEZ3: US, CND/NEZ5: CND)	
205	1-693-626-11	TUNER UNIT (NEZ5: AEP, UK, EE, RU)	
205	1-693-628-11	TUNER UNIT (NEZ3: E, E51, EA, MX, SP, TW,	AR, AUS/NEZ5: E, E51, MX, SP, TW, AR)
205	1-693-629-11	TUNER UNIT (NEZ3: AEP, UK, EE, RU, KR/	NEZ5: KR)
206	1-769-946-11	WIRE (FLAT TYPE) (11 CORE)	(EXCEPT NEZ5: AEP, UK, EE, RU)
206	1-773-011-11	WIRE (FLAT TYPE) (15 CORE)	(NEZ5: AEP, UK, EE, RU)
207	3-703-244-00	BUSHING (2104), CORD	(EXCEPT NEZ3: E, MX/NEZ5: E, MX)
* 207	3-703-571-12	BUSHING (S) (4516), CORD	(NEZ3: E, MX/NEZ5: E, MX)
⚠208	1-769-079-41	CORD, POWER (NEZ3: KR/NEZ5: KR)	
⚠208	1-769-744-81	CORD, POWER (NEZ3: UK, EA/NEZ5: UK)	
⚠208	1-775-790-12	CORD, POWER (NEZ3: AUS)	
⚠208	1-827-226-31	CORD, POWER (NEZ3: E, MX/NEZ5: E, MX)	
⚠208	1-827-597-31	CORD, POWER (NEZ3: TW/NEZ5: TW)	
⚠208	1-829-387-11	CORD, POWER (NEZ3: AR/NEZ5: AR)	
⚠208	1-830-188-11	CORD, POWER (NEZ3: AEP, E51, EE, RU, SP/	NEZ5: AEP, E51, EE, RU, SP)
⚠208	1-830-190-11	CORD, POWER (NEZ3: US, CND/NEZ5: CND)	
209	2-598-643-01	PLATE (M), SHIELD	(NEZ3: AEP, UK, EE, RU, KR/ NEZ5: AEP, UK, EE, RU, KR)
210	2-594-960-31	SPACER (TRANS)	
#1	7-685-646-79	SCREW +BVTP 3X8 TYPE2 N-S	
#4	7-685-871-01	SCREW +BVTT 3X6 (S)	
#5	7-685-647-79	SCREW +BVTP 3X12 TYPE2 IT-3 (NEZ3)	
#5	7-685-648-79	SCREW +BVTP 3X10 TYPE2 N-S (NEZ5)	

8-6. AC BOARD, DC BOARD SECTION

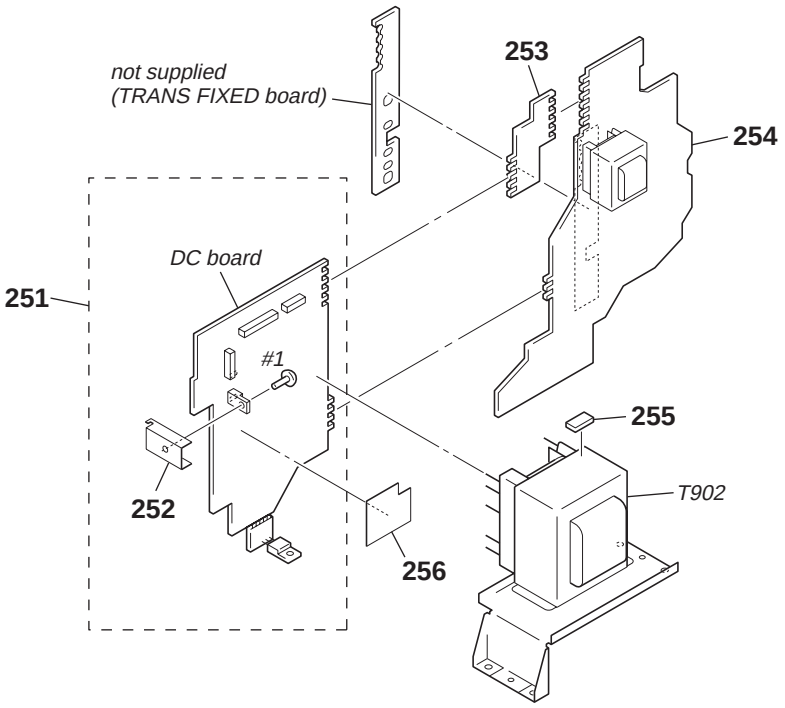

The components identified by mark ⚠ or dotted line with mark ⚠ are critical for safety. Replace only with part number specified.	Les composants identifiés par une marque ⚠ sont critiques pour la sécurité. Ne les remplacer que par une pièce portant le numéro spécifié.

Ref. No.	Part No.	Description	Remark
251	A-1090-922-A	DC BOARD, COMPLETE	(EXCEPT NEZ5: AEP, UK, EE, RU)
251	A-1106-494-A	DC BOARD, COMPLETE	(NEZ5: AEP, UK, EE, RU)
252	2-586-961-11	HEAT SINK	
253	A-1101-747-A	CONNECT BOARD, COMPLETE (NEZ3: US, CND)	
253	A-1101-751-A	CONNECT BOARD, COMPLETE	(EXCEPT NEZ3: US, CND)
254	A-1090-924-A	AC BOARD, COMPLETE (NEZ3: US, CND)	
254	A-1090-970-A	AC BOARD, COMPLETE	(NEZ3: AEP, UK, EE, RU)
254	A-1090-971-A	AC BOARD, COMPLETE (NEZ3: E, E51, SP)	
254	A-1090-972-A	AC BOARD, COMPLETE (NEZ5: CND)	
254	A-1090-977-A	AC BOARD, COMPLETE	(NEZ5: AEP, UK, EE, RU)
254	A-1090-978-A	AC BOARD, COMPLETE (NEZ5: E, E51, SP)	
254	A-1098-903-A	AC BOARD, COMPLETE (NEZ3: AR)	
254	A-1098-932-A	AC BOARD, COMPLETE (NEZ3: AUS)	
254	A-1098-967-A	AC BOARD, COMPLETE (NEZ3: MX, TW)	
254	A-1099-032-A	AC BOARD, COMPLETE (NEZ3: KR)	
254	A-1099-169-A	AC BOARD, COMPLETE (NEZ3: EA)	
254	A-1101-058-A	AC BOARD, COMPLETE (NEZ5: MX, TW)	
254	A-1101-132-A	AC BOARD, COMPLETE (NEZ5: AR)	
254	A-1101-168-A	AC BOARD, COMPLETE (NEZ5: KR)	
255	2-594-960-01	SPACER (TRANSFORMER)	(NEZ3: E, E51, EA, SP, AR/NEZ5: E, E51, SP, AR)
255	2-594-960-11	SPACER (TRANSFORMER)	(NEZ3: AEP, UK, EE, RU, MX, TW, KR, AUS/ NEZ5: CND, AEP, UK, EE, RU, MX, TW, KR)
255	2-594-960-21	SPACER (TRANSFORMER) (NEZ3: US, CND)	
256	2-633-205-01	INSULATED PLATE	
⚠T902	1-443-565-11	TRANSFORMER, POWER (NEZ5: CND)	
⚠T902	1-443-566-11	TRANSFORMER, POWER	(NEZ5: AEP, UK, EE, RU)
⚠T902	1-443-567-11	TRANSFORMER, POWER	(NEZ5: E, E51, MX, TW, AR, SP, KR)
⚠T902	1-443-573-11	TRANSFORMER, POWER	(NEZ3: AEP, UK, EE, RU)
⚠T902	1-443-574-11	TRANSFORMER, POWER	(NEZ3: E, E51, MX, SP, TW, AR, KR, AUS)
⚠T902	1-443-626-11	TRANSFORMER, POWER (NEZ3: US, CND)	
⚠T902	1-443-738-11	POWER TRANSFORMER (NEZ3: EA)	
#1	7-685-646-79	SCREW +BVTP 3X8 TYPE2 N-S	

SECTION 9
ELECTRICAL PARTS LIST

NOTE:

- Due to standardization, replacements in the parts list may be different from the parts specified in the diagrams or the components used on the set.
- -XX and -X mean standardized parts, so they may have some difference from the original one.
- RESISTORS
  All resistors are in ohms.
  METAL: Metal-film resistor.
  METAL OXIDE: Metal oxide-film resistor.
  F: nonflammable
- Abbreviation
  AR : Argentina model E51 : Chirean and Peruvian model KR : Korean model SP : Singapore model
  AUS : Australian model EA : Saudi Arabia model MX : Mexican model TW : Taiwan model
  CND : Canadian model EE : East European model RU : Russian model
- Items marked "*" are not stocked since they are seldom required for routine service. Some delay should be anticipated when ordering these items.
- SEMICONDUCTORS
  In each case, u: µ, for example:
  uA... : µA... uPA... : µPA...
  uPB... : µPB... uPC... : µPC...
  uPD... : µPD...
- CAPACITORS
  uF: µF
- COILS
  uH: µH

The components identified by mark ⚠ or dotted line with mark ⚠ are critical for safety.
Replace only with part number specified.

Les composants identifiés par une marque ⚠ sont critiquens pour la sécurité.
Ne les remplacer que par une pièce portant le numéro spécifié.

When indicating parts by reference number, please include the board.

Ref. No.	Part No.	Description				Remark
	A-1090-924-A	AC BOARD, COMPLETE (NEZ3: US, CND)				
	A-1090-970-A	AC BOARD, COMPLETE (NEZ3: AEP, UK, EE, RU)				
	A-1090-971-A	AC BOARD, COMPLETE (NEZ3: E, E51, SP)				
	A-1090-972-A	AC BOARD, COMPLETE (NEZ5: CND)				
	A-1090-977-A	AC BOARD, COMPLETE (NEZ5: AEP, UK, EE, RU)				
	A-1090-978-A	AC BOARD, COMPLETE (NEZ5: E, E51, SP)				
	A-1098-903-A	AC BOARD, COMPLETE (NEZ3: AR)				
	A-1098-932-A	AC BOARD, COMPLETE (NEZ3: AUS)				
	A-1098-967-A	AC BOARD, COMPLETE (NEZ3: MX, TW)				
	A-1099-032-A	AC BOARD, COMPLETE (NEZ3: KR)				
	A-1099-169-A	AC BOARD, COMPLETE (NEZ3: EA)				
	A-1101-058-A	AC BOARD, COMPLETE (NEZ5: MX, TW)				
	A-1101-132-A	AC BOARD, COMPLETE (NEZ5: AR)				
	A-1101-168-A	AC BOARD, COMPLETE (NEZ5: KR)				
		**********				
		< CAPACITOR >				
C914	1-126-964-11	ELECT	10uF	20%	50V	
C915	1-136-497-81	FILM	0.1uF	5%	50V	
C921	1-126-767-11	ELECT (EXCEPT NEZ3: E, E51, EA, SP/NEZ5: E, E51, SP)	1000uF	20%	16V	
C921	1-126-952-11	ELECT (NEZ3: E, E51, EA, SP/NEZ5: E, E51, SP)	1000uF	20%	35V	
⚠C931	1-113-924-11	CERAMIC	0.0047uF	20%	250V	
		< CONNECTOR >				
* CN901	1-793-660-11	PIN, CONNECTOR (PC BOARD) 3P				
		< DIODE >				
D906	8-719-988-61	DIODE 1SS355TE-17				
D907	8-719-063-79	DIODE 1N4002B				
D908	8-719-063-79	DIODE 1N4002B				
D909	8-719-063-79	DIODE 1N4002B				
D910	8-719-063-79	DIODE 1N4002B				
D922	8-719-988-61	DIODE 1SS355TE-17				
D923	8-719-000-08	DIODE MC2838				
		< LINE FILTER >				
⚠LF901	1-402-663-11	TRANSFORMER, LINE FILTER (LFT) (EXCEPT NEZ3: US, CND/NEZ5: CND)				
		< RESISTOR >				
⚠R903	1-219-512-22	METAL (NEZ3: US, CND/NEZ5: CND)	2.2M	5%	1/2W F	
R904	1-216-829-11	METAL CHIP	4.7K	5%	1/10W	
R905	1-216-829-11	METAL CHIP	4.7K	5%	1/10W	
R906	1-216-833-11	METAL CHIP	10K	5%	1/10W	
R908	1-216-821-11	METAL CHIP	1K	5%	1/10W	
R909	1-216-821-11	METAL CHIP	1K	5%	1/10W	
		< RELAY >				
⚠RY901	1-755-276-11	RELAY, POWER				
		< SWITCH >				
⚠S901	1-786-055-21	SELECTOR, VOLTAGE (VOLTAGE SELECTOR) (NEZ3: E, E51, EA, SP/NEZ5: E, E51, SP)				
		< TRANSFORMER >				
⚠T901	1-439-772-11	TRANSFORMER, POWER (NEZ3: E, E51, EA, SP, AR /NEZ5: E, E51, SP, AR)				
⚠T901	1-439-779-11	TRANSFORMER, POWER (NEZ3: AEP, UK, EE, RU, KR, AUS/ NEZ5: AEP, UK, EE, RU, KR)				
⚠T901	1-439-781-11	TRANSFORMER, POWER (NEZ3: US, CND, MX, TW/NEZ5: CND, MX, TW)				
		**********				
	A-1127-998-A	CD BOARD, COMPLETE				
		**********				
		< CAPACITOR/JUMPER RESISTOR >				
C10	1-165-989-11	CERAMIC CHIP	10uF	10%	6.3V	
C11	1-165-989-11	CERAMIC CHIP	10uF	10%	6.3V	
C14	1-164-360-11	CERAMIC CHIP	0.1uF		16V	
C15	1-164-360-11	CERAMIC CHIP	0.1uF		16V	
C16	1-115-156-11	CERAMIC CHIP	1uF		10V	
C17	1-126-246-11	ELECT CHIP	220uF	20%	4V	
C18	1-162-964-11	CERAMIC CHIP	0.001uF	10%	50V	
C111	1-162-967-11	CERAMIC CHIP	0.0033uF	10%	50V	
C112	1-164-315-11	CERAMIC CHIP	470PF	5%	50V	
C113	1-162-967-11	CERAMIC CHIP	0.0033uF	10%	50V	
C114	1-164-315-11	CERAMIC CHIP	470PF	5%	50V	
C115	1-164-360-11	CERAMIC CHIP	0.1uF		16V	
C116	1-128-995-21	ELECT CHIP	100uF	20%	10V	
C122	1-107-826-11	CERAMIC CHIP	0.1uF	10%	16V	
C123	1-107-826-11	CERAMIC CHIP	0.1uF	10%	16V	
C124	1-162-959-11	CERAMIC CHIP	330PF	5%	50V	
C125	1-164-360-11	CERAMIC CHIP	0.1uF		16V	

Ref. No.	Part No.	Description			Remark
C131	1-162-927-11	CERAMIC CHIP	100PF	5%	50V
C132	1-117-863-11	CERAMIC CHIP	0.47uF	10%	6.3V
C133	1-162-970-11	CERAMIC CHIP	0.01uF	10%	25V
C134	1-164-360-11	CERAMIC CHIP	0.1uF		16V
C141	1-107-826-11	CERAMIC CHIP	0.1uF	10%	16V
C142	1-162-965-11	CERAMIC CHIP	0.0015uF	10%	50V
C143	1-164-360-11	CERAMIC CHIP	0.1uF		16V
C151	1-128-995-21	ELECT CHIP	100uF	20%	10V
C161	1-164-360-11	CERAMIC CHIP	0.1uF		16V
C162	1-164-360-11	CERAMIC CHIP	0.1uF		16V
C163	1-164-360-11	CERAMIC CHIP	0.1uF		16V
C171	1-162-919-11	CERAMIC CHIP	22PF	5%	50V
C172	1-162-920-11	CERAMIC CHIP	27PF	5%	50V
C174	1-164-360-11	CERAMIC CHIP	0.1uF		16V
C181	1-164-360-11	CERAMIC CHIP	0.1uF		16V
C182	1-164-360-11	CERAMIC CHIP	0.1uF		16V
C183	1-124-778-00	ELECT CHIP	22uF	20%	6.3V
C184	1-124-778-00	ELECT CHIP	22uF	20%	6.3V
C185	1-164-315-11	CERAMIC CHIP	470PF	5%	50V
C186	1-164-315-11	CERAMIC CHIP	470PF	5%	50V
C194	1-164-360-11	CERAMIC CHIP	0.1uF		16V
C195	1-164-360-11	CERAMIC CHIP	0.1uF		16V
C196	1-164-360-11	CERAMIC CHIP	0.1uF		16V
C201	1-128-995-21	ELECT CHIP	100uF	20%	10V
C203	1-128-995-21	ELECT CHIP	100uF	20%	10V
C209	1-162-970-11	CERAMIC CHIP	0.01uF	10%	25V
C210	1-107-826-11	CERAMIC CHIP	0.1uF	10%	16V
C211	1-164-230-11	CERAMIC CHIP	220PF	5%	50V
C212	1-162-919-11	CERAMIC CHIP	22PF	5%	50V
C213	1-162-919-11	CERAMIC CHIP	22PF	5%	50V
C251	1-162-969-11	CERAMIC CHIP	0.0068uF	10%	25V
C252	1-164-360-11	CERAMIC CHIP	0.1uF		16V
C255	1-164-360-11	CERAMIC CHIP	0.1uF		16V
C257	1-164-360-11	CERAMIC CHIP	0.1uF		16V
C258	1-164-360-11	CERAMIC CHIP	0.1uF		16V
C259	1-164-360-11	CERAMIC CHIP	0.1uF		16V
C260	1-128-394-11	ELECT CHIP	220uF	20%	10V
C302	1-164-360-11	CERAMIC CHIP	0.1uF		16V
C303	1-164-360-11	CERAMIC CHIP	0.1uF		16V
C305	1-126-246-11	ELECT CHIP	220uF	20%	4V
C306	1-164-360-11	CERAMIC CHIP	0.1uF		16V
C307	1-164-360-11	CERAMIC CHIP	0.1uF		16V
C308	1-126-208-21	ELECT CHIP	47uF	20%	4V
C309	1-164-360-11	CERAMIC CHIP	0.1uF		16V
C310	1-164-360-11	CERAMIC CHIP	0.1uF		16V
C311	1-164-360-11	CERAMIC CHIP	0.1uF		16V
C312	1-164-360-11	CERAMIC CHIP	0.1uF		16V
C313	1-164-360-11	CERAMIC CHIP	0.1uF		16V
C314	1-126-208-21	ELECT CHIP	47uF	20%	4V
C315	1-107-826-11	CERAMIC CHIP	0.1uF	10%	16V
C316	1-162-966-11	CERAMIC CHIP	0.0022uF	10%	50V
C317	1-162-970-11	CERAMIC CHIP	0.01uF	10%	25V
C318	1-162-970-11	CERAMIC CHIP	0.01uF	10%	25V
C320	1-162-964-11	CERAMIC CHIP	0.001uF	10%	50V
		< CONNECTOR >			
CN101	1-770-425-11	CONNECTOR, FFC/FPC 16P			

Ref. No.	Part No.	Description			Remark
CN201	1-818-350-11	CONNECTOR (FFC) 27P			
		< FERRITE BEAD >			
FB301	1-500-445-21	FERRITE, EMI (SMD) (2012)			
		< IC >			
IC101	8-752-425-12	IC CXD3059AR			
IC251	6-705-808-01	IC BA5947FM-E2			
IC301	6-705-365-01	IC TC94A34FG-002			
IC303	6-705-807-01	IC BH15FB1WG			
		< TRANSISTOR >			
Q10	6-551-120-01	TRANSISTOR	2SA2119K		
		< RESISTOR/FERRITE BEAD >			
R10	1-216-791-11	METAL CHIP	3.3	5%	1/10W
R11	1-216-864-11	SHORT CHIP	0		
R12	1-216-845-11	METAL CHIP	100K	5%	1/10W
R13	1-218-446-11	METAL CHIP	1	5%	1/10W
R111	1-216-821-11	METAL CHIP	1K	5%	1/10W
R112	1-216-835-11	METAL CHIP	15K	5%	1/10W
R113	1-216-821-11	METAL CHIP	1K	5%	1/10W
R114	1-216-835-11	METAL CHIP	15K	5%	1/10W
R121	1-216-835-11	METAL CHIP	15K	5%	1/10W
R131	1-216-857-11	METAL CHIP	1M	5%	1/10W
R132	1-216-833-11	METAL CHIP	10K	5%	1/10W
R133	1-216-848-11	METAL CHIP	180K	5%	1/10W
R141	1-216-829-11	METAL CHIP	4.7K	5%	1/10W
R142	1-216-821-11	METAL CHIP	1K	5%	1/10W
R143	1-216-827-11	METAL CHIP	3.3K	5%	1/10W
R151	1-216-864-11	SHORT CHIP	0		
R161	1-216-809-11	METAL CHIP	100	5%	1/10W
R162	1-216-841-11	METAL CHIP	47K	5%	1/10W
R163	1-216-809-11	METAL CHIP	100	5%	1/10W
R165	1-216-864-11	SHORT CHIP	0		
R166	1-216-821-11	METAL CHIP	1K	5%	1/10W
R167	1-216-809-11	METAL CHIP	100	5%	1/10W
R171	1-216-817-11	METAL CHIP	470	5%	1/10W
R172	1-216-857-11	METAL CHIP	1M	5%	1/10W
R173	1-216-295-00	SHORT CHIP	0		
R181	1-216-809-11	METAL CHIP	100	5%	1/10W
R182	1-216-809-11	METAL CHIP	100	5%	1/10W
R191	1-216-864-11	SHORT CHIP	0		
R201	1-500-445-21	FERRITE, EMI (SMD) (2012)			
R203	1-216-864-11	SHORT CHIP	0		
R204	1-216-295-00	SHORT CHIP	0		
R205	1-216-864-11	SHORT CHIP	0		
R251	1-216-833-11	METAL CHIP	10K	5%	1/10W
R252	1-216-837-11	METAL CHIP	22K	5%	1/10W
R253	1-216-833-11	METAL CHIP	10K	5%	1/10W
R301	1-216-845-11	METAL CHIP	100K	5%	1/10W
R302	1-216-833-11	METAL CHIP	10K	5%	1/10W
R303	1-216-845-11	METAL CHIP	100K	5%	1/10W
R305	1-216-845-11	METAL CHIP	100K	5%	1/10W
R306	1-216-864-11	SHORT CHIP	0		
R307	1-216-833-11	METAL CHIP	10K	5%	1/10W
R313	1-216-813-11	METAL CHIP	220	5%	1/10W

CD | CONNECT | DC | HEAD PHONE

Ref. No.	Part No.	Description			Remark
R351	1-216-809-11	METAL CHIP	100	5%	1/10W
R352	1-216-809-11	METAL CHIP	100	5%	1/10W
R353	1-216-809-11	METAL CHIP	100	5%	1/10W
R354	1-216-809-11	METAL CHIP	100	5%	1/10W
R401	1-216-809-11	METAL CHIP	100	5%	1/10W
R402	1-216-809-11	METAL CHIP	100	5%	1/10W
R403	1-216-809-11	METAL CHIP	100	5%	1/10W
R404	1-216-809-11	METAL CHIP	100	5%	1/10W
R405	1-216-809-11	METAL CHIP	100	5%	1/10W
R406	1-216-809-11	METAL CHIP	100	5%	1/10W
R407	1-216-809-11	METAL CHIP	100	5%	1/10W
R408	1-216-809-11	METAL CHIP	100	5%	1/10W
R409	1-216-809-11	METAL CHIP	100	5%	1/10W
R410	1-216-809-11	METAL CHIP	100	5%	1/10W
R411	1-216-809-11	METAL CHIP	100	5%	1/10W
R412	1-216-809-11	METAL CHIP	100	5%	1/10W
R419	1-216-809-11	METAL CHIP	100	5%	1/10W
		< VIBRATOR >			
X171	1-767-408-21	VIBRATOR, CRYSTAL (16.9344MHz)			

****

	A-1101-747-A	CONNECT BOARD, COMPLETE (NEZ3: US, CND)
	A-1101-751-A	CONNECT BOARD, COMPLETE (EXCEPT NEZ3: US, CND)
		**********

****

	A-1090-922-A	DC BOARD, COMPLETE (EXCEPT NEZ5: AEP, UK, EE, RU)
	A-1106-494-A	DC BOARD, COMPLETE (NEZ5: AEP, UK, EE, RU)
		**********
	2-586-961-01	HEAT SINK
	7-685-646-79	SCREW +BVTP 3X8 TYPE2 N-S

Ref. No.	Part No.	Description			Remark
		< CAPACITOR >			
C336	1-126-965-11	ELECT	22uF	20%	50V
C350	1-126-964-11	ELECT	10uF	20%	50V
C901	1-136-497-81	FILM	0.1uF	5%	50V
C902	1-136-497-81	FILM	0.1uF	5%	50V
C903	1-136-497-81	FILM	0.1uF	5%	50V
C918	1-104-655-91	ELECT	470uF	20%	6.3V
C919	1-126-943-21	ELECT	2200uF	20%	25V
C920	1-126-933-11	ELECT	100uF	20%	16V
C922	1-126-934-11	ELECT	220uF	20%	16V
C923	1-164-156-11	CERAMIC CHIP	0.1uF		25V
C925	1-162-974-11	CERAMIC CHIP	0.01uF		50V
C928	1-126-933-11	ELECT	100uF	20%	16V
C929	1-162-974-11	CERAMIC CHIP	0.01uF		50V
C930	1-164-156-11	CERAMIC CHIP	0.1uF		25V
		< CONNECTOR >			
CN900	1-568-828-11	CONNECTOR, FFC 9P			
* CN902	1-564-511-11	PLUG, CONNECTOR 8P			
CN903	1-564-507-11	PLUG, CONNECTOR 4P			

Ref. No.	Part No.	Description		Remark
		< DIODE >		
D322	8-719-000-07	DIODE	MC2836	
D911	8-719-063-79	DIODE	1N4002B	
D912	8-719-063-79	DIODE	1N4002B	
D913	8-719-063-79	DIODE	1N4002B	
D914	8-719-063-79	DIODE	1N4002B	
D916	8-719-046-47	DIODE	1N5401TM	
D917	8-719-046-47	DIODE	1N5401TM	
D918	8-719-046-47	DIODE	1N5401TM	
D919	8-719-046-47	DIODE	1N5401TM	
D920	8-719-000-08	DIODE	MC2838	
D926	8-719-063-79	DIODE	1N4002B	
D927	8-719-063-79	DIODE	1N4002B	
D928	8-719-063-79	DIODE	1N4002B	
D936	6-500-848-01	DIODE	MC2840-T112-1	
		< IC >		
IC900	8-759-231-57	IC	TA7810S	
IC901	6-703-546-01	IC	TA7804LS	
IC902	8-759-701-59	IC	NJM78M09FA	
IC903	6-703-546-01	IC	TA7804LS	
		< TRANSISTOR >		
Q311	8-729-037-13	TRANSISTOR	KTA1271Y	
Q315	8-729-027-43	TRANSISTOR	DTC114EKA-T146	
Q333	8-729-027-43	TRANSISTOR	DTC114EKA-T146	
Q338	8-729-027-43	TRANSISTOR	DTC114EKA-T146	
		< RESISTOR >		
R901	1-216-841-11	METAL CHIP	47K	5% 1/10W
R902	1-216-841-11	METAL CHIP	47K	5% 1/10W
R907	1-216-841-11	METAL CHIP	47K	5% 1/10W
R911	1-216-841-11	METAL CHIP	47K	5% 1/10W
R912	1-216-841-11	METAL CHIP	47K	5% 1/10W
R913	1-216-841-11	METAL CHIP	47K	5% 1/10W
R914	1-216-829-11	METAL CHIP	4.7K	5% 1/10W
R915	1-216-837-11	METAL CHIP	22K	5% 1/10W
R916	1-216-841-11	METAL CHIP	47K	5% 1/10W
R917	1-216-845-11	METAL CHIP	100K	5% 1/10W
R918	1-216-821-11	METAL CHIP	1K	5% 1/10W
R919	1-216-841-11	METAL CHIP	47K	5% 1/10W

****

	A-1090-813-A	HEAD PHONE BOARD, COMPLETE (NEZ3: US, CND)
	A-1090-905-A	HEAD PHONE BOARD, COMPLETE (NEZ5: CND)
	A-1095-915-A	HEAD PHONE BOARD, COMPLETE (NEZ3: AEP, UK, EE, RU, KR)
	A-1095-924-A	HEAD PHONE BOARD, COMPLETE (NEZ3: E, E51, EA, MX, SP, TW, AR, AUS)
	A-1095-934-A	HEAD PHONE BOARD, COMPLETE (NEZ5: AEP, UK, EE, RU)
	A-1095-972-A	HEAD PHONE BOARD, COMPLETE (NEZ5: E, E51, MX, TW, AR, SP)
	A-1102-061-A	HEAD PHONE BOARD, COMPLETE (NEZ5: KR)
		**********

Ref. No.	Part No.	Description		Remark
		< CAPACITOR >		
C520	1-162-974-11	CERAMIC CHIP	0.01uF	50V
C521	1-162-974-11	CERAMIC CHIP	0.01uF	50V

HEAD PHONE **MAIN**

Ref. No.	Part No.	Description				Remark
		< FLAT TYPE WIRE >				
FFC501	1-830-584-11	WIRE (FLAT TYPE) (13 CORE)				
		< JACK >				
J500	1-793-829-11	JACK, HEADPHONE (PHONES)				
		< RESISTOR >				
R519	1-216-817-11	METAL CHIP	470	5%	1/10W	
R520	1-216-817-11	METAL CHIP	470	5%	1/10W	
R525	1-216-817-11	METAL CHIP	470	5%	1/10W	
R526	1-216-817-11	METAL CHIP	470	5%	1/10W	
R527	1-216-817-11	METAL CHIP	470	5%	1/10W	
R528	1-216-817-11	METAL CHIP	470	5%	1/10W	
R529	1-216-809-11	METAL CHIP	100	5%	1/10W	(NEZ3: US, CND)
R529	1-216-813-11	METAL CHIP	220	5%	1/10W	(EXCEPT NEZ3: US, CND/ NEZ5: AEP, UK, EE, RU)
R529	1-216-817-11	METAL CHIP	470	5%	1/10W	(NEZ5: AEP, UK, EE, RU)
R530	1-216-809-11	METAL CHIP	100	5%	1/10W	(NEZ3: US, CND)
R530	1-216-813-11	METAL CHIP	220	5%	1/10W	(EXCEPT NEZ3: US, CND/ NEZ5: AEP, UK, EE, RU)
R530	1-216-817-11	METAL CHIP	470	5%	1/10W	(NEZ5: AEP, UK, EE, RU)
R531	1-216-809-11	METAL CHIP	100	5%	1/10W	(NEZ3: US, CND)
R531	1-216-813-11	METAL CHIP	220	5%	1/10W	(EXCEPT NEZ3: US, CND/NEZ5)
R531	1-216-817-11	METAL CHIP	470	5%	1/10W	(NEZ5)
R532	1-216-809-11	METAL CHIP	100	5%	1/10W	(NEZ3: US, CND)
R532	1-216-813-11	METAL CHIP	220	5%	1/10W	(EXCEPT NEZ3: US, CND/NEZ5)
R532	1-216-817-11	METAL CHIP	470	5%	1/10W	(NEZ5)
R533	1-216-809-11	METAL CHIP	100	5%	1/10W	(NEZ3: US, CND)
R533	1-216-813-11	METAL CHIP	220	5%	1/10W	(EXCEPT NEZ3: US, CND/NEZ5)
R533	1-216-817-11	METAL CHIP	470	5%	1/10W	(NEZ5)
R534	1-216-809-11	METAL CHIP	100	5%	1/10W	(NEZ3: US, CND)
R534	1-216-813-11	METAL CHIP	220	5%	1/10W	(EXCEPT NEZ3: US, CND/NEZ5)
R534	1-216-817-11	METAL CHIP	470	5%	1/10W	(NEZ5)

****

Ref. No.	Part No.	Description	Remark
	A-1095-890-A	MAIN BOARD, COMPLETE (NEZ3: US, CND)	
	A-1095-894-A	MAIN BOARD, COMPLETE	(NEZ3: AEP, UK, EE, RU)
	A-1095-921-A	MAIN BOARD, COMPLETE (NEZ3: SP)	
	A-1095-929-A	MAIN BOARD, COMPLETE (NEZ5: CND)	
	A-1095-932-A	MAIN BOARD, COMPLETE	(NEZ5: AEP, UK, EE, RU)
	A-1095-970-A	MAIN BOARD, COMPLETE	(NEZ5: E, E51, SP, AR)
	A-1098-686-A	MAIN BOARD, COMPLETE (NEZ3: MX)	
	A-1098-752-A	MAIN BOARD, COMPLETE (NEZ5: TW)	
	A-1098-904-A	MAIN BOARD, COMPLETE (NEZ3: AR)	
	A-1098-933-A	MAIN BOARD, COMPLETE (NEZ3: AUS)	
	A-1098-968-A	MAIN BOARD, COMPLETE (NEZ3: TW)	
	A-1099-033-A	MAIN BOARD, COMPLETE (NEZ3: KR)	
	A-1099-078-A	MAIN BOARD, COMPLETE (NEZ3: E, E51)	
	A-1099-170-A	MAIN BOARD, COMPLETE (NEZ3: EA)	
	A-1101-169-A	MAIN BOARD, COMPLETE (NEZ5: KR)	
	A-1119-015-A	MAIN BOARD, COMPLETE (NEZ5: MX)	
		**********	
	2-586-961-01	HEAT SINK	
	7-685-646-79	SCREW +BVTP 3X8 TYPE2 N-S	
		< CAPACITOR >	
C101	1-162-964-11	CERAMIC CHIP 0.001uF 10%	50V
C102	1-162-966-11	CERAMIC CHIP 0.0022uF 10%	50V
C103	1-162-927-11	CERAMIC CHIP 100PF 5%	50V
C104	1-104-665-11	ELECT 100uF 20%	25V
C106	1-164-227-11	CERAMIC CHIP 0.022uF 10%	25V
C107	1-126-961-11	ELECT 2.2uF 20%	50V
C108	1-162-968-11	CERAMIC CHIP 0.0047uF 10%	50V
C111	1-162-964-11	CERAMIC CHIP 0.001uF 10%	50V
C113	1-126-957-11	ELECT 0.22uF 20%	50V
C114	1-126-959-11	ELECT 0.47uF 20%	50V
C115	1-126-964-11	ELECT 10uF 20%	50V
C116	1-162-962-11	CERAMIC CHIP 470PF 10%	50V
C117	1-162-964-11	CERAMIC CHIP 0.001uF 10%	50V
C118	1-165-176-11	CERAMIC CHIP 0.047uF 10%	16V
C119	1-162-974-11	CERAMIC CHIP 0.01uF	50V
C120	1-162-960-11	CERAMIC CHIP 220PF 10%	50V
C121	1-164-360-11	CERAMIC CHIP 0.1uF	16V (NEZ3: AEP, UK, EE, RU, EA, KR, AUS/ NEZ5: AEP, UK, EE, RU, KR)
C126	1-162-960-11	CERAMIC CHIP 220PF 10%	50V
C127	1-162-962-11	CERAMIC CHIP 470PF 10%	50V
C133	1-130-491-00	MYLAR 0.047uF 5%	50V
C134	1-162-964-11	CERAMIC CHIP 0.001uF 10%	50V
C135	1-126-964-11	ELECT 10uF 20%	50V
C136	1-126-964-11	ELECT 10uF 20%	50V
C138	1-126-965-11	ELECT 22uF 20%	50V
C139	1-162-962-11	CERAMIC CHIP 470PF 10%	50V
C140	1-162-960-11	CERAMIC CHIP 220PF 10%	50V
C201	1-162-964-11	CERAMIC CHIP 0.001uF 10%	50V
C202	1-162-966-11	CERAMIC CHIP 0.0022uF 10%	50V
C203	1-162-927-11	CERAMIC CHIP 100PF 5%	50V
C204	1-104-665-11	ELECT 100uF 20%	25V
C206	1-164-227-11	CERAMIC CHIP 0.022uF 10%	25V
C207	1-126-961-11	ELECT 2.2uF 20%	50V
C208	1-162-968-11	CERAMIC CHIP 0.0047uF 10%	50V
C211	1-162-964-11	CERAMIC CHIP 0.001uF 10%	50V
C213	1-126-957-11	ELECT 0.22uF 20%	50V
C214	1-126-959-11	ELECT 0.47uF 20%	50V
C215	1-126-964-11	ELECT 10uF 20%	50V
C216	1-162-962-11	CERAMIC CHIP 470PF 10%	50V
C217	1-162-964-11	CERAMIC CHIP 0.001uF 10%	50V
C218	1-165-176-11	CERAMIC CHIP 0.047uF 10%	16V

Ref. No.	Part No.	Description			Remark
C219	1-162-974-11	CERAMIC CHIP	0.01uF		50V
C220	1-162-960-11	CERAMIC CHIP	220PF	10%	50V
C221	1-164-360-11	CERAMIC CHIP	0.1uF		16V
		(NEZ3: AEP, UK, EE, RU, EA, KR, AUS/ NEZ5: AEP, UK, EE, RU, KR)			
C226	1-162-960-11	CERAMIC CHIP	220PF	10%	50V
C227	1-162-962-11	CERAMIC CHIP	470PF	10%	50V
C233	1-130-491-00	MYLAR	0.047uF	5%	50V
C234	1-162-964-11	CERAMIC CHIP	0.001uF	10%	50V
C235	1-126-964-11	ELECT	10uF	20%	50V
C236	1-126-964-11	ELECT	10uF	20%	50V
C238	1-126-965-11	ELECT	22uF	20%	50V
C239	1-162-962-11	CERAMIC CHIP	470PF	10%	50V
C240	1-162-960-11	CERAMIC CHIP	220PF	10%	50V
C301	1-162-915-11	CERAMIC CHIP	10PF	0.5PF	50V
C302	1-126-934-11	ELECT	220uF	20%	16V
C303	1-130-479-00	MYLAR	0.0047uF	5%	50V
C304	1-130-479-00	MYLAR	0.0047uF	5%	50V
C305	1-126-934-11	ELECT	220uF	20%	16V
C306	1-126-935-11	ELECT	470uF	20%	16V
C307	1-126-935-11	ELECT	470uF	20%	16V
C308	1-126-935-11	ELECT	470uF	20%	16V
C309	1-126-935-11	ELECT	470uF	20%	16V
C310	1-162-927-11	CERAMIC CHIP	100PF	5%	50V
C311	1-162-927-11	CERAMIC CHIP	100PF	5%	50V
C312	1-162-960-11	CERAMIC CHIP	220PF	10%	50V
C313	1-126-933-11	ELECT	100uF	20%	16V
C314	1-130-483-00	MYLAR	0.01uF	5%	50V
C315	1-162-927-11	CERAMIC CHIP	100PF	5%	50V
C316	1-162-927-11	CERAMIC CHIP	100PF	5%	50V
C317	1-162-919-11	CERAMIC CHIP	22PF	5%	50V
C318	1-162-927-11	CERAMIC CHIP	100PF	5%	50V
C319	1-162-927-11	CERAMIC CHIP	100PF	5%	50V
C320	1-162-927-11	CERAMIC CHIP	100PF	5%	50V
C321	1-162-927-11	CERAMIC CHIP	100PF	5%	50V
C322	1-162-927-11	CERAMIC CHIP	100PF	5%	50V
C324	1-126-963-11	ELECT	4.7uF	20%	50V (NEZ5)
C325	1-162-927-11	CERAMIC CHIP	100PF	5%	50V
C326	1-162-927-11	CERAMIC CHIP	100PF	5%	50V
C327	1-162-927-11	CERAMIC CHIP	100PF	5%	50V
C328	1-162-927-11	CERAMIC CHIP	100PF	5%	50V
C329	1-126-963-11	ELECT	4.7uF	20%	50V
C330	1-162-966-11	CERAMIC CHIP	0.0022uF	10%	50V
C331	1-107-726-91	CERAMIC CHIP	0.01uF	10%	16V
		(NEZ3: AEP, UK, EE, RU, EA, KR, AUS/ NEZ5: AEP, UK, EE, RU, KR)			
C335	1-126-927-21	ELECT	2200uF	20%	10V
C351	1-104-665-11	ELECT	100uF	20%	25V
C352	1-126-953-11	ELECT	2200uF	20%	35V
C353	1-126-953-11	ELECT	2200uF	20%	35V
C354	1-126-947-11	ELECT	47uF	20%	35V
C355	1-130-487-00	MYLAR	0.022uF	5%	50V
C356	1-130-471-00	MYLAR	0.001uF	5%	50V
C358	1-130-483-00	MYLAR	0.01uF	5%	50V
C361	1-126-947-11	ELECT	47uF	20%	35V
C362	1-126-964-11	ELECT	10uF	20%	50V
C363	1-126-964-11	ELECT	10uF	20%	50V
C364	1-126-964-11	ELECT	10uF	20%	50V

Ref. No.	Part No.	Description			Remark
C370	1-164-360-11	CERAMIC CHIP	0.1uF		16V
		(NEZ3: AEP, UK, EE, RU, EA, KR, AUS/ NEZ5: AEP, UK, EE, RU, KR)			
C501	1-162-927-11	CERAMIC CHIP	100PF	5%	50V
C503	1-126-947-11	ELECT	47uF	20%	35V
C505	1-162-927-11	CERAMIC CHIP	100PF	5%	50V
C506	1-126-947-11	ELECT	47uF	20%	35V
C507	1-107-826-11	CERAMIC CHIP	0.1uF	10%	16V
C511	1-126-957-11	ELECT	0.22uF	20%	50V
C512	1-136-169-00	FILM	0.22uF	5%	50V
C513	1-126-957-11	ELECT	0.22uF	20%	50V
C514	1-136-169-00	FILM	0.22uF	5%	50V
C516	1-126-933-11	ELECT	100uF	20%	16V
C523	1-162-962-11	CERAMIC CHIP	470PF	10%	50V
C524	1-162-962-11	CERAMIC CHIP	470PF	10%	50V
		< CONNECTOR >			
* CN301	1-815-448-11	PIN, CONNECTOR (PWB) 7P			
CN313	1-564-506-11	PLUG, CONNECTOR 3P (NEZ5)			
CN317	1-779-295-11	CONNECTOR, FFC (LIF (NON-ZIF)) 27P			
* CN319	1-568-830-11	SOCKET, CONNECTOR 11P (EXCEPT NEZ5: AEP, UK, EE, RU)			
CN319	1-784-776-11	CONNECTOR, FFC 15P (NEZ5: AEP, UK, EE, RU)			
CN320	1-784-774-11	CONNECTOR, FFC 13P (EXCEPT NEZ5: AEP, UK, EE, RU)			
CN320	1-784-776-11	CONNECTOR, FFC 15P (NEZ5: AEP, UK, EE, RU)			
CN321	1-784-780-11	CONNECTOR, FFC 19P			
CN500	1-784-735-11	CONNECTOR, FFC 13P			
		< DIODE >			
D302	8-719-988-61	DIODE 1SS355TE-17			
D305	8-719-063-79	DIODE 1N4002B			
D307	8-719-000-07	DIODE MC2836			
D313	8-719-000-08	DIODE MC2838 (NEZ5)			
D318	8-719-988-61	DIODE 1SS355TE-17			
D319	6-500-848-01	DIODE MC2840-T112-1			
D320	6-500-848-01	DIODE MC2840-T112-1			
D321	8-719-988-61	DIODE 1SS355TE-17			
D323	8-719-083-60	DIODE UDZSTE-174.7B			
D324	8-719-083-60	DIODE UDZSTE-174.7B			
D325	6-500-848-01	DIODE MC2840-T112-1			
D326	8-719-083-60	DIODE UDZSTE-174.7B			
D327	6-500-848-01	DIODE MC2840-T112-1 (EXCEPT NEZ3: AEP, UK, EE, RU, EA, KR/ NEZ5: AEP, UK, EE, RU, KR)			
		< FERRITE BEAD/JUMPER RESISTOR >			
FB303	1-500-445-21	FERRITE, EMI (SMD) (2012)			
FB304	1-500-445-21	FERRITE, EMI (SMD) (2012)			
FB305	1-500-445-21	FERRITE, EMI (SMD) (2012)			
FB306	1-216-864-11	SHORT CHIP 0			
FB307	1-216-864-11	SHORT CHIP 0 (EXCEPT NEZ3: US, CND, TW/NEZ5: US, CND, TW)			
FB307	1-500-445-21	FERRITE, EMI (SMD) (2012) (NEZ3: US, CND, TW/NEZ5: US, CND, TW)			
FB317	1-500-445-21	FERRITE, EMI (SMD) (2012)			

MAIN

Ref. No.	Part No.	Description			Remark
		< IC >			
IC302	6-702-895-01	IC BD3881FV			
IC501	8-759-333-24	IC LM1876TF			
		< JACK >			
J302	1-536-708-81	TERMINAL BOARD, PUSH (4P) (SPEAKER IMPEDANCE USE 6-16Ω)			
J321	1-815-629-11	JACK (AUDIO IN)			
		< JUMPER RESISTOR >			
JR001	1-216-864-11	SHORT CHIP	0		
JR002	1-216-864-11	SHORT CHIP	0		
JR003	1-216-864-11	SHORT CHIP	0		
JR004	1-216-864-11	SHORT CHIP	0		
JR152	1-216-864-11	SHORT CHIP	0		
		< COIL >			
L101	1-422-009-13	COIL, AIR-CORE			
L201	1-422-009-13	COIL, AIR-CORE			
		< TRANSISTOR >			
Q300	8-729-049-79	TRANSISTOR	RT1P137S-TP		
Q301	8-729-027-43	TRANSISTOR	DTC114EKA-T146		
Q316	8-729-120-28	TRANSISTOR	2SC1623-L5L6 (NEZ5)		
Q317	8-729-040-76	TRANSISTOR	KTA1273-Y-AT (NEZ5)		
Q320	8-729-209-15	TRANSISTOR	2SD2012		
Q321	8-729-120-28	TRANSISTOR	2SC1623-L5L6		
Q326	8-729-600-22	TRANSISTOR	2SA1235-F		
Q327	8-729-600-22	TRANSISTOR	2SA1235-F		
Q328	8-729-045-62	FET	2SK2158-T2B		
Q329	8-729-045-62	FET	2SK2158-T2B		
Q330	8-729-045-62	FET	2SK2158-T2B		
Q331	8-729-027-31	TRANSISTOR	DTA124EKA-T146		
Q332	8-729-027-31	TRANSISTOR	DTA124EKA-T146		
Q342	8-729-600-22	TRANSISTOR	2SA1235-F		
Q343	8-729-120-28	TRANSISTOR	2SC1623-L5L6		
Q344	8-729-028-54	TRANSISTOR	KTC3205		
Q347	8-729-037-03	TRANSISTOR	KTA1266GR-AT		
Q348	8-729-027-43	TRANSISTOR	DTC114EKA-T146		
		< RESISTOR >			
R100	1-216-833-11	METAL CHIP	10K	5%	1/10W
R101	1-216-841-11	METAL CHIP	47K	5%	1/10W
R102	1-216-841-11	METAL CHIP	47K	5%	1/10W
R103	1-216-817-11	METAL CHIP	470	5%	1/10W
R104	1-216-805-11	METAL CHIP	47	5%	1/10W
R105	1-216-849-11	METAL CHIP	220K	5%	1/10W
R106	1-216-829-11	METAL CHIP	4.7K	5%	1/10W
R107	1-216-845-11	METAL CHIP	100K	5%	1/10W
R108	1-216-833-11	METAL CHIP	10K	5%	1/10W
R109	1-216-829-11	METAL CHIP	4.7K	5%	1/10W
R110	1-216-821-11	METAL CHIP	1K	5%	1/10W
R111	1-216-837-11	METAL CHIP	22K	5%	1/10W
R112	1-216-837-11	METAL CHIP	22K	5%	1/10W
R114	1-216-829-11	METAL CHIP	4.7K	5%	1/10W
R116	1-216-841-11	METAL CHIP	47K	5%	1/10W
R117	1-216-825-11	METAL CHIP	2.2K	5%	1/10W
R118	1-216-833-11	METAL CHIP	10K	5%	1/10W
R119	1-216-833-11	METAL CHIP	10K	5%	1/10W
R120	1-216-833-11	METAL CHIP	10K	5%	1/10W
R121	1-216-825-11	METAL CHIP	2.2K	5%	1/10W
R122	1-216-845-11	METAL CHIP	100K	5%	1/10W (NEZ5)
R122	1-216-853-11	METAL CHIP	470K	5%	1/10W (NEZ3)
R123	1-216-825-11	METAL CHIP	2.2K	5%	1/10W
R124	1-216-837-11	METAL CHIP	22K	5%	1/10W
R125	1-216-837-11	METAL CHIP	22K	5%	1/10W
R126	1-216-837-11	METAL CHIP	22K	5%	1/10W
R128	1-216-821-11	METAL CHIP	1K	5%	1/10W
R131	1-216-821-11	METAL CHIP	1K	5%	1/10W
R132	1-216-821-11	METAL CHIP	1K	5%	1/10W
R133	1-216-864-11	SHORT CHIP	0		
R134	1-216-864-11	SHORT CHIP	0		
R135	1-216-845-11	METAL CHIP	100K	5%	1/10W
R136	1-216-833-11	METAL CHIP	10K	5%	1/10W
R137	1-216-829-11	METAL CHIP	4.7K	5%	1/10W
R138	1-216-825-11	METAL CHIP	2.2K	5%	1/10W
R139	1-216-837-11	METAL CHIP	22K	5%	1/10W
R143	1-216-833-11	METAL CHIP	10K	5%	1/10W
R145	1-216-864-11	SHORT CHIP	0		
R147	1-216-837-11	METAL CHIP	22K	5%	1/10W
R148	1-216-825-11	METAL CHIP	2.2K	5%	1/10W
R149	1-216-833-11	METAL CHIP	10K	5%	1/10W
R200	1-216-833-11	METAL CHIP	10K	5%	1/10W
R201	1-216-841-11	METAL CHIP	47K	5%	1/10W
R202	1-216-841-11	METAL CHIP	47K	5%	1/10W
R203	1-216-817-11	METAL CHIP	470	5%	1/10W
R204	1-216-805-11	METAL CHIP	47	5%	1/10W
R205	1-216-849-11	METAL CHIP	220K	5%	1/10W
R206	1-216-829-11	METAL CHIP	4.7K	5%	1/10W
R207	1-216-845-11	METAL CHIP	100K	5%	1/10W
R208	1-216-833-11	METAL CHIP	10K	5%	1/10W
R209	1-216-829-11	METAL CHIP	4.7K	5%	1/10W
R210	1-216-821-11	METAL CHIP	1K	5%	1/10W
R211	1-216-837-11	METAL CHIP	22K	5%	1/10W
R212	1-216-837-11	METAL CHIP	22K	5%	1/10W
R214	1-216-829-11	METAL CHIP	4.7K	5%	1/10W
R216	1-216-841-11	METAL CHIP	47K	5%	1/10W
R217	1-216-825-11	METAL CHIP	2.2K	5%	1/10W
R218	1-216-833-11	METAL CHIP	10K	5%	1/10W
R219	1-216-833-11	METAL CHIP	10K	5%	1/10W
R220	1-216-833-11	METAL CHIP	10K	5%	1/10W
R221	1-216-825-11	METAL CHIP	2.2K	5%	1/10W
R222	1-216-845-11	METAL CHIP	100K	5%	1/10W (NEZ5)
R222	1-216-853-11	METAL CHIP	470K	5%	1/10W (NEZ3)
R223	1-216-825-11	METAL CHIP	2.2K	5%	1/10W
R224	1-216-837-11	METAL CHIP	22K	5%	1/10W
R225	1-216-837-11	METAL CHIP	22K	5%	1/10W
R226	1-216-837-11	METAL CHIP	22K	5%	1/10W
R228	1-216-821-11	METAL CHIP	1K	5%	1/10W
R231	1-216-821-11	METAL CHIP	1K	5%	1/10W
R232	1-216-821-11	METAL CHIP	1K	5%	1/10W

MAIN

Ref. No.	Part No.	Description			Remark
R233	1-216-864-11	SHORT CHIP	0		
R234	1-216-864-11	SHORT CHIP	0		
R235	1-216-845-11	METAL CHIP	100K	5%	1/10W
R236	1-216-833-11	METAL CHIP	10K	5%	1/10W
R237	1-216-829-11	METAL CHIP	4.7K	5%	1/10W
R238	1-216-825-11	METAL CHIP	2.2K	5%	1/10W
R239	1-216-837-11	METAL CHIP	22K	5%	1/10W
R243	1-216-833-11	METAL CHIP	10K	5%	1/10W
R245	1-216-864-11	SHORT CHIP	0		
R247	1-216-837-11	METAL CHIP	22K	5%	1/10W
R248	1-216-825-11	METAL CHIP	2.2K	5%	1/10W
R249	1-216-833-11	METAL CHIP	10K	5%	1/10W
R301	1-216-841-11	METAL CHIP	47K	5%	1/10W
R302	1-216-833-11	METAL CHIP	10K	5%	1/10W
R303	1-216-833-11	METAL CHIP	10K	5%	1/10W
R304	1-216-829-11	METAL CHIP	4.7K	5%	1/10W
R309	1-216-821-11	METAL CHIP	1K	5%	1/10W
R310	1-216-829-11	METAL CHIP	4.7K	5%	1/10W
R311	1-216-793-11	METAL CHIP	4.7	5%	1/10W
R312	1-216-793-11	METAL CHIP	4.7	5%	1/10W
R318	1-216-825-11	METAL CHIP	2.2K	5%	1/10W (NEZ5)
R319	1-216-857-11	METAL CHIP	1M	5%	1/10W
R320	1-216-829-11	METAL CHIP	4.7K	5%	1/10W
R321	1-260-095-11	CARBON	470	5%	1/2W
R325	1-216-829-11	METAL CHIP	4.7K	5%	1/10W
R326	1-216-837-11	METAL CHIP	22K	5%	1/10W
R328	1-216-833-11	METAL CHIP	10K	5%	1/10W (NEZ5)
R329	1-216-845-11	METAL CHIP	100K	5%	1/10W (NEZ5)
R330	1-216-841-11	METAL CHIP	47K	5%	1/10W (NEZ5)
R331	1-216-841-11	METAL CHIP	47K	5%	1/10W (NEZ5)
R358	1-216-841-11	METAL CHIP	47K	5%	1/10W
R362	1-216-837-11	METAL CHIP	22K	5%	1/10W
R366	1-216-837-11	METAL CHIP	22K	5%	1/10W
R367	1-216-825-11	METAL CHIP	2.2K	5%	1/10W
R368	1-216-833-11	METAL CHIP	10K	5%	1/10W
R369	1-216-833-11	METAL CHIP	10K	5%	1/10W
R370	1-216-833-11	METAL CHIP	10K	5%	1/10W
R371	1-216-833-11	METAL CHIP	10K	5%	1/10W
R376	1-216-845-11	METAL CHIP	100K	5%	1/10W
R377	1-216-817-11	METAL CHIP	470	5%	1/10W
R378	1-216-817-11	METAL CHIP	470	5%	1/10W
R379	1-216-817-11	METAL CHIP	470	5%	1/10W
R380	1-216-817-11	METAL CHIP	470	5%	1/10W
R381	1-216-817-11	METAL CHIP	470	5%	1/10W
R382	1-216-817-11	METAL CHIP	470	5%	1/10W
R383	1-216-813-11	METAL CHIP	220	5%	1/10W
R384	1-216-813-11	METAL CHIP	220	5%	1/10W
R385	1-260-095-11	CARBON	470	5%	1/2W (NEZ3: US, CND)
R385	1-260-328-11	CARBON	1K	5%	1/2W (EXCEPT NEZ3: US, CND)
R386	1-260-087-11	CARBON	100	5%	1/2W (EXCEPT NEZ3: US, CND/NEZ5)
R386	1-260-320-11	CARBON	220	5%	1/2W (EXCEPT NEZ3/NEZ5: AEP, UK, EE, RU)
R386	1-260-095-11	CARBON	470	5%	1/2W (NEZ3: US, CND/NEZ5: AEP, UK, EE, RU)
R387	1-216-833-11	METAL CHIP	10K	5%	1/10W
R388	1-216-833-11	METAL CHIP	10K	5%	1/10W
R389	1-216-833-11	METAL CHIP	10K	5%	1/10W
R390	1-216-845-11	METAL CHIP	100K	5%	1/10W
R501	1-216-821-11	METAL CHIP	1K	5%	1/10W
R502	1-216-841-11	METAL CHIP	47K	5%	1/10W
R503	1-216-817-11	METAL CHIP	470	5%	1/10W
R504	1-216-841-11	METAL CHIP	47K	5%	1/10W
R505	1-216-841-11	METAL CHIP	47K	5%	1/10W
R506	1-216-821-11	METAL CHIP	1K	5%	1/10W
R507	1-216-833-11	METAL CHIP	10K	5%	1/10W
R508	1-216-817-11	METAL CHIP	470	5%	1/10W
R509	1-216-841-11	METAL CHIP	47K	5%	1/10W
R511	1-216-837-11	METAL CHIP	22K	5%	1/10W
R512	1-216-837-11	METAL CHIP	22K	5%	1/10W
R514	1-216-833-11	METAL CHIP	10K	5%	1/10W
⚠R515	1-216-373-81	METAL OXIDE	2.2	5%	2W F
⚠R516	1-216-373-81	METAL OXIDE	2.2	5%	2W F
R517	1-216-841-11	METAL CHIP	47K	5%	1/10W
R518	1-216-841-11	METAL CHIP	47K	5%	1/10W
R521	1-216-833-11	METAL CHIP	10K	5%	1/10W
R523	1-216-805-11	METAL CHIP	47	5%	1/10W (EXCEPT NEZ3/NEZ5: AEP, UK, EE, RU)
R523	1-216-809-11	METAL CHIP	100	5%	1/10W (EXCEPT NEZ3: US, CND/NEZ5)
R523	1-216-813-11	METAL CHIP	220	5%	1/10W (NEZ3: US, CND)
R523	1-216-864-11	SHORT CHIP	0 (NEZ5: AEP, UK, EE, RU)		
R524	1-216-805-11	METAL CHIP	47	5%	1/10W (EXCEPT NEZ3/NEZ5: AEP, UK, EE, RU)
R524	1-216-809-11	METAL CHIP	100	5%	1/10W (EXCEPT NEZ3: US, CND/NEZ5)
R524	1-216-813-11	METAL CHIP	220	5%	1/10W (NEZ3: US, CND)
R524	1-216-864-11	SHORT CHIP	0 (NEZ5: AEP, UK, EE, RU)		
		< TRANSFORMER >			
T301	1-443-760-11	TRANSFORMER, BIAS OSCILLATION			

****

The components identified by mark ⚠ or dotted line with mark ⚠ are critical for safety. Replace only with part number specified.	Les composants identifiés par une marque ⚠ sont critiques pour la sécurité. Ne les remplacer que par une pièce portant le numéro spécifié.

PANEL

Ref. No.	Part No.	Description			Remark
	A-1095-891-A	PANEL BOARD, COMPLETE (NEZ3: US, CND)			
	A-1095-895-A	PANEL BOARD, COMPLETE			(NEZ3: AEP, UK, EE, RU)
	A-1095-922-A	PANEL BOARD, COMPLETE			(NEZ3: SP, TW, KR, AUS)
	A-1095-933-A	PANEL BOARD, COMPLETE			(NEZ5: AEP, UK, EE, RU)
	A-1095-971-A	PANEL BOARD, COMPLETE (for SILVER)			(NEZ5: SP, TW, KR)
	A-1098-688-A	PANEL BOARD, COMPLETE			(NEZ3: E, E51, MX, AR)
	A-1098-754-A	PANEL BOARD, COMPLETE			(NEZ5: E, E51, MX, AR)
	A-1099-172-A	PANEL BOARD, COMPLETE (NEZ3: EA)			
	A-1099-813-A	PANEL BOARD, COMPLETE (NEZ5: CND)			
	A-1099-837-A	PANEL BOARD, COMPLETE (for WHITE)			(NEZ5: SP, KR)
		**********			
	2-581-391-01	PLATE, LIGHT GUIDE			
	2-594-335-01	HOLDER (LCD-C)			
		< CAPACITOR >			
C1701	1-107-726-91	CERAMIC CHIP	0.01uF	10%	16V (NEZ5)
C1702	1-107-726-91	CERAMIC CHIP	0.01uF	10%	16V (NEZ5)
C1801	1-124-234-00	ELECT	22uF	20%	16V
C1803	1-107-726-91	CERAMIC CHIP	0.01uF	10%	16V
C1804	1-107-726-91	CERAMIC CHIP	0.01uF	10%	16V
C1805	1-164-360-11	CERAMIC CHIP	0.1uF		16V
C1806	1-107-726-91	CERAMIC CHIP	0.01uF	10%	16V
C1807	1-126-518-11	ELECT	470uF	20%	4V
C1808	1-124-589-11	ELECT	47uF	20%	16V
C1809	1-124-234-00	ELECT	22uF	20%	16V
C1810	1-107-726-91	CERAMIC CHIP	0.01uF	10%	16V
C1811	1-126-157-11	ELECT	10uF	20%	16V
C1815	1-107-726-91	CERAMIC CHIP	0.01uF	10%	16V
C1816	1-107-726-91	CERAMIC CHIP	0.01uF	10%	16V
C1817	1-164-360-11	CERAMIC CHIP	0.1uF		16V
C1818	1-126-518-11	ELECT	470uF	20%	4V
C1819	1-162-923-11	CERAMIC CHIP	47PF	5%	50V
C1820	1-162-923-11	CERAMIC CHIP	47PF	5%	50V
C1821	1-164-816-11	CERAMIC CHIP	220PF	2%	50V
C1822	1-162-919-11	CERAMIC CHIP	22PF	5%	50V
C1823	1-107-726-91	CERAMIC CHIP	0.01uF	10%	16V
C1826	1-164-360-11	CERAMIC CHIP	0.1uF		16V
C1827	1-164-360-11	CERAMIC CHIP	0.1uF		16V
C1828	1-164-360-11	CERAMIC CHIP	0.1uF		16V
C1829	1-107-726-91	CERAMIC CHIP	0.01uF	10%	16V
C1830	1-126-157-11	ELECT	10uF	20%	16V
C1831	1-164-360-11	CERAMIC CHIP	0.1uF		16V
C1832	1-164-360-11	CERAMIC CHIP	0.1uF		16V
C1833	1-107-726-91	CERAMIC CHIP	0.01uF	10%	16V
C1834	1-107-726-91	CERAMIC CHIP	0.01uF	10%	16V
C1859	1-124-259-11	ELECT	4.7uF	20%	50V
C1860	1-126-157-11	ELECT	10uF	20%	16V
C1861	1-107-726-91	CERAMIC CHIP	0.01uF	10%	16V
C1864	1-107-726-91	CERAMIC CHIP	0.01uF	10%	16V

Ref. No.	Part No.	Description	Remark
		< CONNECTOR >	
* CN1805	1-566-970-11	HOUSING, CONNECTOR (PC BOARD) 8P	
		< DIODE >	
D1801	8-719-988-61	DIODE 1SS355TE-17	
D1804	6-501-139-01	LED SELU2B10A-SLF62 (LCD BACK LIGHT)	(NEZ3)
D1804	6-501-250-01	LED SELU2WA10C-B56-LF62	(LCD BACK LIGHT) (NEZ5)
D1805	6-501-139-01	LED SELU2B10A-SLF62 (LCD BACK LIGHT)	(NEZ3)
D1805	6-501-250-01	LED SELU2WA10C-B56-LF62	(LCD BACK LIGHT) (NEZ5)
D1806	8-719-063-93	LED SLR325VC-N-T32 (STANDBY)	
D1808	8-719-988-61	DIODE 1SS355TE-17	
D1809	8-719-000-07	DIODE MC2836	
D1898	8-719-000-07	DIODE MC2836	
D1899	8-719-000-07	DIODE MC2836	
		< FLAT TYPE WIRE >	
FFC1801	1-830-583-11	WIRE (FLAT TYPE) (7 CORE)	
FFC1803	1-830-579-11	WIRE (FLAT TYPE) (9 CORE)	
FFC1804	1-830-580-11	WIRE (FLAT TYPE) (15 CORE)	(NEZ5: AEP, UK, EE, RU)
FFC1804	1-830-581-11	WIRE (FLAT TYPE) (13 CORE)	(EXCEPT NEZ5: AEP, UK, EE, RU)
FFC1805	1-830-582-11	WIRE (FLAT TYPE) (19 CORE)	
		< IC >	
IC1801	6-805-582-01	IC M30620FCPFP	
IC1802	6-600-349-21	IC NJL23H400A	
IC1803	8-759-713-61	IC PST3429UL	
		< JUMPER RESISTOR >	
JR1805	1-216-864-11	SHORT CHIP 0	
JR1817	1-216-296-11	SHORT CHIP 0	
JR1818	1-216-296-11	SHORT CHIP 0	
JR1819	1-216-864-11	SHORT CHIP 0	
JR1820	1-216-296-11	SHORT CHIP 0	
JR1821	1-216-864-11	SHORT CHIP 0	
JR1822	1-216-864-11	SHORT CHIP 0	
JR1823	1-216-296-11	SHORT CHIP 0	
JR1824	1-216-296-11	SHORT CHIP 0	
JR1827	1-216-864-11	SHORT CHIP 0	
JR1831	1-216-864-11	SHORT CHIP 0	
JR1832	1-216-296-11	SHORT CHIP 0	
JR1836	1-216-864-11	SHORT CHIP 0	
		< LIQUID CRYSTAL DISPLAY >	
LCD1801	1-805-843-11	DISPLAY PANEL, LIQUID CRYSTAL	(NEZ3/NEZ5 (WHITE): SP, KR)
LCD1801	1-805-843-21	DISPLAY PANEL, LIQUID CRYSTAL	(NEZ5 (SILVER): CND, AEP, UK, EE, RU, E, E51, MX, TW, AR, SP, KR)
		< TRANSISTOR >	
Q1801	8-729-120-28	TRANSISTOR 2SC1623-L5L6	
Q1802	8-729-037-13	TRANSISTOR KTA1271Y	
Q1803	8-729-027-43	TRANSISTOR DTC114EKA-T146	

PANEL

Ref. No.	Part No.	Description			Remark
Q1804	8-729-037-13	TRANSISTOR	KTA1271Y		
Q1805	8-729-027-43	TRANSISTOR	DTC114EKA-T146		
Q1806	8-729-027-43	TRANSISTOR	DTC114EKA-T146		
Q1807	8-729-120-28	TRANSISTOR	2SC1623-L5L6		
Q1808	8-729-027-43	TRANSISTOR	DTC114EKA-T146		
Q1809	8-729-027-31	TRANSISTOR	DTA124EKA-T146		
Q1810	8-729-027-31	TRANSISTOR	DTA124EKA-T146		
Q1811	8-729-027-43	TRANSISTOR	DTC114EKA-T146		
		< RESISTOR >			
R1701	1-216-813-11	METAL CHIP	220	5%	1/10W (NEZ5)
R1701	1-216-817-11	METAL CHIP	470	5%	1/10W (NEZ3)
R1702	1-216-817-11	METAL CHIP	470	5%	1/10W (NEZ3)
R1702	1-216-821-11	METAL CHIP	1K	5%	1/10W (NEZ5)
R1703	1-216-813-11	METAL CHIP	220	5%	1/10W (NEZ5)
R1703	1-216-817-11	METAL CHIP	470	5%	1/10W (NEZ3)
R1704	1-216-817-11	METAL CHIP	470	5%	1/10W (NEZ3)
R1704	1-216-821-11	METAL CHIP	1K	5%	1/10W (NEZ5)
R1707	1-216-845-11	METAL CHIP	100K	5%	1/10W
R1708	1-216-825-11	METAL CHIP	2.2K	5%	1/10W (NEZ3: US, CND, AEP, UK, EE, RU/ NEZ5: CND, AEP, UK, EE, RU)
R1708	1-216-829-11	METAL CHIP	4.7K	5%	1/10W (NEZ3: SP, TW, KR, AUS/NEZ5: SP, TW, KR)
R1708	1-216-837-11	METAL CHIP	22K	5%	1/10W (NEZ3: E, E51, MX, AR/NEZ5: E, E51, MX, AR)
R1708	1-216-841-11	METAL CHIP	47K	5%	1/10W (NEZ3: EA)
R1709	1-216-833-11	METAL CHIP	10K	5%	1/10W (EXCEPT NEZ3: AEP, UK, EE, RU)
R1711	1-216-809-11	METAL CHIP	100	5%	1/10W (NEZ5)
R1711	1-216-813-11	METAL CHIP	220	5%	1/10W (NEZ3)
R1801	1-216-809-11	METAL CHIP	100	5%	1/10W
R1802	1-216-809-11	METAL CHIP	100	5%	1/10W
R1803	1-216-809-11	METAL CHIP	100	5%	1/10W
R1804	1-216-809-11	METAL CHIP	100	5%	1/10W
R1805	1-216-857-11	METAL CHIP	1M	5%	1/10W
R1806	1-216-821-11	METAL CHIP	1K	5%	1/10W
R1807	1-216-809-11	METAL CHIP	100	5%	1/10W
R1808	1-216-809-11	METAL CHIP	100	5%	1/10W
R1810	1-216-809-11	METAL CHIP	100	5%	1/10W
R1811	1-216-809-11	METAL CHIP	100	5%	1/10W
R1812	1-216-809-11	METAL CHIP	100	5%	1/10W
R1813	1-216-809-11	METAL CHIP	100	5%	1/10W
R1814	1-216-809-11	METAL CHIP	100	5%	1/10W
R1815	1-216-821-11	METAL CHIP	1K	5%	1/10W
R1816	1-216-809-11	METAL CHIP	100	5%	1/10W
R1817	1-216-841-11	METAL CHIP	47K	5%	1/10W
R1818	1-216-849-11	METAL CHIP	220K	5%	1/10W
R1819	1-216-833-11	METAL CHIP	10K	5%	1/10W
R1820	1-216-845-11	METAL CHIP	100K	5%	1/10W
R1821	1-216-833-11	METAL CHIP	10K	5%	1/10W
R1822	1-216-809-11	METAL CHIP	100	5%	1/10W
R1823	1-216-845-11	METAL CHIP	100K	5%	1/10W
R1824	1-216-809-11	METAL CHIP	100	5%	1/10W
R1825	1-216-809-11	METAL CHIP	100	5%	1/10W
R1826	1-216-809-11	METAL CHIP	100	5%	1/10W
R1827	1-216-809-11	METAL CHIP	100	5%	1/10W
R1828	1-216-809-11	METAL CHIP	100	5%	1/10W
R1829	1-216-833-11	METAL CHIP	10K	5%	1/10W
R1830	1-216-829-11	METAL CHIP	4.7K	5%	1/10W
R1831	1-216-845-11	METAL CHIP	100K	5%	1/10W
R1832	1-216-809-11	METAL CHIP	100	5%	1/10W
R1833	1-216-809-11	METAL CHIP	100	5%	1/10W
R1834	1-216-809-11	METAL CHIP	100	5%	1/10W
R1835	1-216-809-11	METAL CHIP	100	5%	1/10W
R1836	1-216-809-11	METAL CHIP	100	5%	1/10W
R1837	1-216-809-11	METAL CHIP	100	5%	1/10W
R1838	1-216-809-11	METAL CHIP	100	5%	1/10W
R1839	1-216-809-11	METAL CHIP	100	5%	1/10W
R1840	1-216-833-11	METAL CHIP	10K	5%	1/10W
R1841	1-216-821-11	METAL CHIP	1K	5%	1/10W
R1842	1-216-833-11	METAL CHIP	10K	5%	1/10W
R1843	1-216-833-11	METAL CHIP	10K	5%	1/10W
R1844	1-216-837-11	METAL CHIP	22K	5%	1/10W
R1845	1-216-833-11	METAL CHIP	10K	5%	1/10W
R1846	1-216-829-11	METAL CHIP	4.7K	5%	1/10W
R1847	1-216-829-11	METAL CHIP	4.7K	5%	1/10W
R1848	1-216-829-11	METAL CHIP	4.7K	5%	1/10W
R1849	1-216-829-11	METAL CHIP	4.7K	5%	1/10W
R1850	1-216-821-11	METAL CHIP	1K	5%	1/10W
R1851	1-216-825-11	METAL CHIP	2.2K	5%	1/10W
R1852	1-216-821-11	METAL CHIP	1K	5%	1/10W
R1853	1-216-825-11	METAL CHIP	2.2K	5%	1/10W
R1854	1-216-864-11	SHORT CHIP	0		
R1855	1-216-833-11	METAL CHIP	10K	5%	1/10W
R1856	1-216-853-11	METAL CHIP	470K	5%	1/10W
R1857	1-216-833-11	METAL CHIP	10K	5%	1/10W
R1858	1-216-833-11	METAL CHIP	10K	5%	1/10W
R1859	1-216-841-11	METAL CHIP	47K	5%	1/10W
R1860	1-216-841-11	METAL CHIP	47K	5%	1/10W
R1861	1-216-837-11	METAL CHIP	22K	5%	1/10W
R1862	1-216-809-11	METAL CHIP	100	5%	1/10W
R1863	1-216-809-11	METAL CHIP	100	5%	1/10W
R1866	1-216-809-11	METAL CHIP	100	5%	1/10W
R1867	1-216-809-11	METAL CHIP	100	5%	1/10W
R1869	1-216-833-11	METAL CHIP	10K	5%	1/10W
R1871	1-216-833-11	METAL CHIP	10K	5%	1/10W
R1872	1-216-821-11	METAL CHIP	1K	5%	1/10W
R1873	1-216-825-11	METAL CHIP	2.2K	5%	1/10W
R1874	1-216-825-11	METAL CHIP	2.2K	5%	1/10W
R1875	1-216-829-11	METAL CHIP	4.7K	5%	1/10W
R1876	1-216-829-11	METAL CHIP	4.7K	5%	1/10W (EXCEPT NEZ3: US, CND)
R1877	1-216-833-11	METAL CHIP	10K	5%	1/10W (EXCEPT NEZ3: US, CND)
R1878	1-216-833-11	METAL CHIP	10K	5%	1/10W
R1879	1-216-821-11	METAL CHIP	1K	5%	1/10W

PANEL **SHIELD**

Ref. No.	Part No.	Description			Remark
R1880	1-216-825-11	METAL CHIP	2.2K	5%	1/10W
R1881	1-216-825-11	METAL CHIP	2.2K	5%	1/10W
R1882	1-216-829-11	METAL CHIP	4.7K	5%	1/10W
R1883	1-216-829-11	METAL CHIP	4.7K	5%	1/10W
R1884	1-216-825-11	METAL CHIP	2.2K	5%	1/10W
R1885	1-216-825-11	METAL CHIP	2.2K	5%	1/10W
R1886	1-216-809-11	METAL CHIP	100	5%	1/10W
R1887	1-216-809-11	METAL CHIP	100	5%	1/10W
R1888	1-216-829-11	METAL CHIP	4.7K	5%	1/10W
R1889	1-216-829-11	METAL CHIP	4.7K	5%	1/10W
R1892	1-216-809-11	METAL CHIP	100	5%	1/10W
R1893	1-216-833-11	METAL CHIP	10K	5%	1/10W
R1894	1-216-833-11	METAL CHIP	10K	5%	1/10W
		< ROTALY ENCODER >			
RV1801	1-479-195-11	ENCODER (VOLUME)			
		< SWITCH >			
S1801	1-786-050-21	SWITCH, KEY BOARD (I/⏻)			
S1802	1-786-050-21	SWITCH, KEY BOARD (DSGX)			
S1803	1-786-050-21	SWITCH, KEY BOARD (CD SYNC)			
S1804	1-786-050-21	SWITCH, KEY BOARD (● PAUSE/START)			
S1805	1-786-050-21	SWITCH, KEY BOARD (PLAY MODE/TUNING MODE)			
S1806	1-786-050-21	SWITCH, KEY BOARD (🗀+) (EXCEPT NEZ3: US, CND)			
S1807	1-786-050-21	SWITCH, KEY BOARD (🗀–) (EXCEPT NEZ3: US, CND)			
S1808	1-786-050-21	SWITCH, KEY BOARD (TAPE ▶)			
S1809	1-786-050-21	SWITCH, KEY BOARD (CD ▶II)			
S1810	1-786-050-21	SWITCH, KEY BOARD (TUNER/BAND)			
S1811	1-786-050-21	SWITCH, KEY BOARD (■)			
S1812	1-786-050-21	SWITCH, KEY BOARD (TUNING –, I◁◁ ◀◀)			
S1813	1-786-050-21	SWITCH, KEY BOARD (TUNING +, ▶▶ ▷▷I)			
		< VIBRATOR >			
X1801	1-579-463-11	VIBRATOR, CRYSTAL (32.768kHz)			
X1802	1-795-482-11	VIBRATOR, CERAMIC (10MHz)			

****

	A-1101-746-A	SHIELD BOARD, COMPLETE (EXCEPT NEZ3: AEP, UK, EE, RU, KR/NEZ5: AEP, UK, EE, RU, KR)
		**********

****

MISCELLANEOUS
****

Ref. No.	Part No.	Description	Remark
55	1-796-352-71	DECK, MECHANICAL (CMAL5Z231)	
152	1-452-899-11	MAGNET	
⚠160	8-820-221-01	OPTICAL PICK-UP BLOCK KSM-213EDP/C2NP (Including spindle motor (M101), sled motor (M102))	
163	1-827-992-11	WIRE (FLAT TYPE) (16 CORE)	
164	1-830-585-11	WIRE (FLAT TYPE) (27 CORE)	
205	1-693-625-11	TUNER UNIT (NEZ3: US, CND/NEZ5: CND)	
205	1-693-626-11	TUNER UNIT (NEZ5: AEP, UK, EE, RU)	
205	1-693-628-11	TUNER UNIT (NEZ3: E, E51, EA, MX, SP, TW, AR, AUS/NEZ5: E, E51, MX, SP, TW, AR)	
205	1-693-629-11	TUNER UNIT (NEZ3: AEP, UK, EE, RU, KR/NEZ5: KR)	
206	1-769-946-11	WIRE (FLAT TYPE) (11 CORE) (EXCEPT NEZ5: AEP, UK, EE, RU)	
206	1-773-011-11	WIRE (FLAT TYPE) (15 CORE) (NEZ5: AEP, UK, EE, RU)	
⚠208	1-769-079-41	CORD, POWER (NEZ3: KR/NEZ5: KR)	
⚠208	1-769-744-81	CORD, POWER (NEZ3: UK, EA/NEZ5: UK, EE, RU)	
⚠208	1-775-790-12	CORD, POWER (NEZ3: AUS)	
⚠208	1-827-226-31	CORD, POWER (NEZ3: E, MX/NEZ5: E, MX)	
⚠208	1-827-597-31	CORD, POWER (NEZ3: TW/NEZ5: TW)	
⚠208	1-829-387-11	CORD, POWER (NEZ3: AR/NEZ5: AR)	
⚠208	1-830-188-11	CORD, POWER (NEZ3: AEP, E51, EE, RU, SP/NEZ5: AEP, E51, EE, RU, SP)	
⚠208	1-830-190-11	CORD, POWER (NEZ3: US, CND/NEZ5: CND)	
M301	1-787-103-11	FAN, DC (NEZ5)	
S101	1-771-853-11	SWITCH, DETECTION (LIMIT)	
S1820	1-692-960-21	SWITCH, PUSH (1 KEY) (CD LID OPEN/CLOSE DETECT)	
⚠T902	1-443-565-11	TRANSFORMER, POWER (NEZ5: CND)	
⚠T902	1-443-566-11	TRANSFORMER, POWER (NEZ5: AEP, UK, EE, RU)	
⚠T902	1-443-567-11	TRANSFORMER, POWER (NEZ5: E, E51, MX, TW, AR, SP, KR)	
⚠T902	1-443-573-11	TRANSFORMER, POWER (NEZ3: AEP, UK, EE, RU)	
⚠T902	1-443-574-11	TRANSFORMER, POWER (NEZ3: E, E51, MX, SP, TW, AR, KR, AUS)	
⚠T902	1-443-626-11	TRANSFORMER, POWER (NEZ3: US, CND)	
⚠T902	1-443-738-11	POWER TRANSFORMER (NEZ3: EA)	

****

ACCESSORIES
****

⚠	1-770-019-51	ADAPTOR, CONVERSION PLUG (NEZ3: UK, EA/NEZ5: UK)
⚠	1-573-856-12	ADAPTOR, CONVERSION 2P (NEZ5: E)
⚠	1-569-007-11	ADAPTOR, CONVERSION 2P (NEZ3: E51, SP/NEZ5: E51, SP)

The components identified by mark ⚠ or dotted line with mark ⚠ are critical for safety. Replace only with part number specified.	Les composants identifiés par une marque ⚠ sont critiques pour la sécurité. Ne les remplacer que par une pièce portant le numéro spécifié.

HCD-NEZ3/NEZ5

SONY

SERVICE MANUAL

Ver. 1.2 2005.09

US Model
Australian Model
HCD-NEZ3
Canadian Model
AEP Model
UK Model
E Model
HCD-NEZ3/NEZ5

SUPPLEMENT-1

File this supplement with the service manual.

Subject: Change of specifications

Changing Destination

HCD-NEZ3 : US, Canadian, AEP, UK, East European, Russian models
HCD-NEZ5 : AEP, UK, East European, Russian models

In this set, specification have been changed in the midway of production.
Only information on a new type has been described in this supplement-1.
Refer to original service manual for other information.
Also, repair after confirming the type by discrimination without fail, because there is no interchangeability between new type and former type.

TABLE OF CONTENTS

1. NEW/FORMER TYPE DISCRIMINATION 2

2. DISASSEMBLY
2-1. Disassembly Flow 3
2-2. Cabinet 3
2-3. Cabinet (Top) Section 4
2-4. Base Unit (BU-K8BD83S-WOD) 4
2-5. Front Panel Section 5
2-6. Mechanical Deck (CMAL5Z231) 5
2-7. MAIN Board 6
2-8. Tuner Unit 6

3. ELECTRICAL ADJUSTMENTS 7

4. DIAGRAMS
4-1. Block Diagram – CD SERVO Section – 9
4-2. Block Diagram – MAIN Section – 10
4-3. Printed Wiring Board – CD Board – 12
4-4. Schematic Diagram – CD Board – 13
4-5. Printed Wiring Boards – MAIN Section – 15
4-6. Schematic Diagram – MAIN Section (1/2) – 16
4-7. Schematic Diagram – MAIN Section (2/2) – 17
4-8. Printed Wiring Board – PANEL Board – 18
4-9. Schematic Diagram – PANEL Board – 19
4-10. Printed Wiring Boards – DC Section – 20
4-11. Printed Wiring Board – AC Board – 21
4-12. Schematic Diagram – POWER SUPPLY Section – 22

5. EXPLODED VIEW
5-1. Cabinet Section 29
5-2. Mechanical Deck Section 30
5-3. Panel Board Section 31
5-4. Cabinet (Top) Section 32
5-5. MAIN Board Section 33
5-6. AC Board, DC Board Section 34

6. ELECTRICAL PARTS LIST 35

9-879-528-81

1. NEW/FORMER TYPE DISCRIMINATION

New/former type can be distinguished in the version display mode of the test mode.

Procedure:

1. Press the I/⏻ button to turn the power on.
2. While pressing the DSGX button, press the ⏮ button and turn the VOLUME knob in the counter-clock wise.
3. When this mode is activated, model and destination is displayed on the fluorescent indicator tube.
4. Press the DSGX button to display software version and year, month, day of the software creation display mode.
   Former type : ####V1XX
   New type : ####V2XX
   (#### :release date of software, XX :revision of version)
5. To release this mode, while pressing the ■ button, press the I/⏻ button and turn the VOLUME knob in the counter-clock wise.

- **Method to Distinguished by Serial No.**

The set since serial No. of the following table is new type.

Model	Destination	Serial No.
HCD-NEZ3	US	Since 8259876
	Canadian	Since 4119759
	AEP	Since 5147808
	UK	Since 6126228
	East European and Russian	Since 7120201
HCD-NEZ5	AEP	Since 5130981
	UK	Since 6103836
	East European and Russian	Since 7109341

2. DISASSEMBLY

- This set can be disassembled in the order shown below.

2-1. DISASSEMBLY FLOW

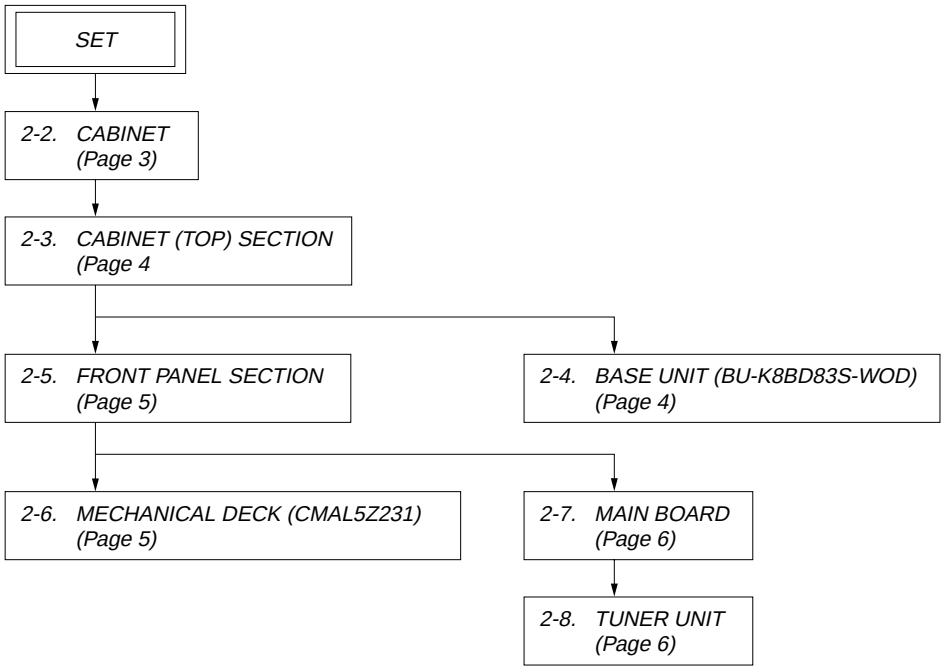

Note: Follow the disassembly procedure in the numerical order given.

2-2. CABINET

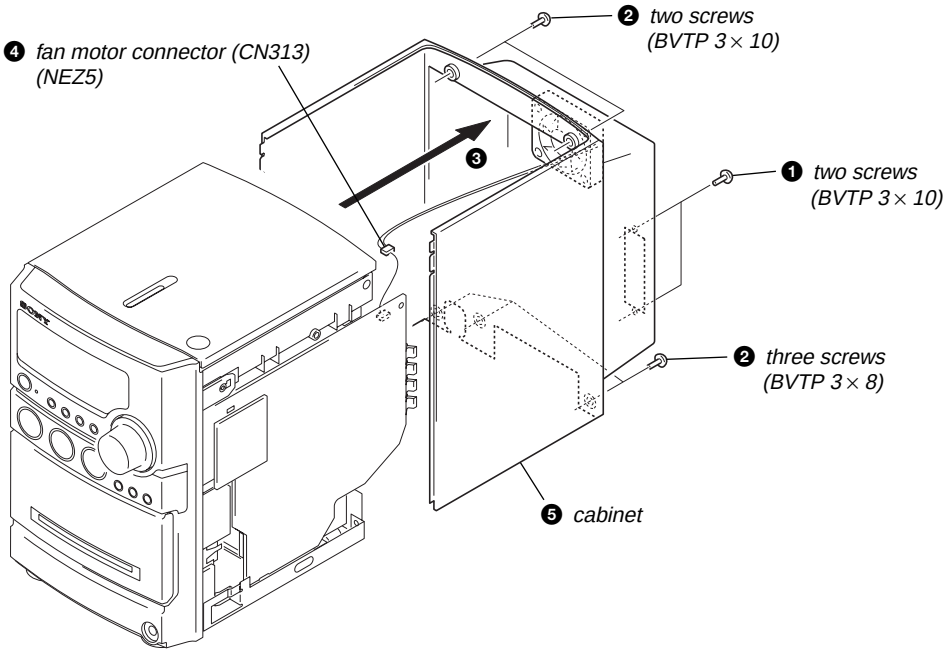

2-3. CABINET (TOP) SECTION

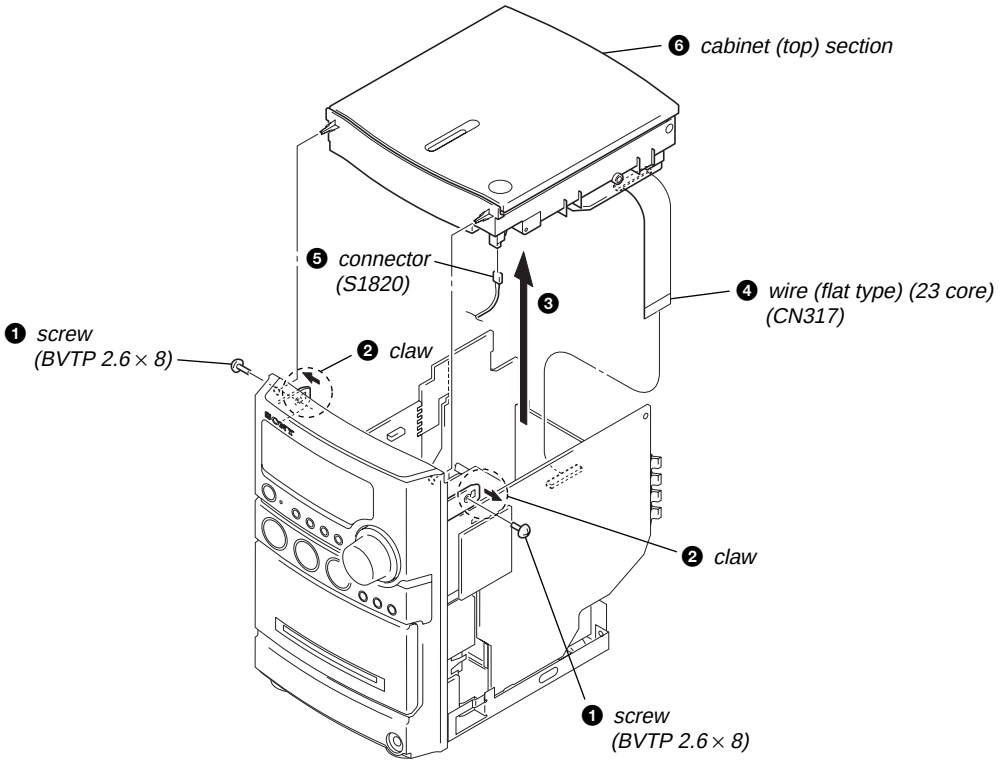

2-4. BASE UNIT (BU-K8BD83S-WOD)

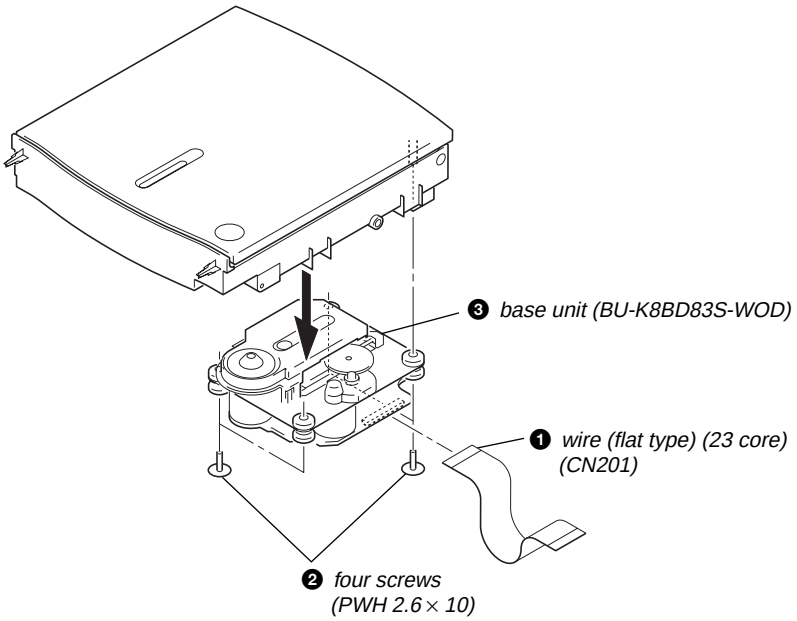

2-5. FRONT PANEL SECTION

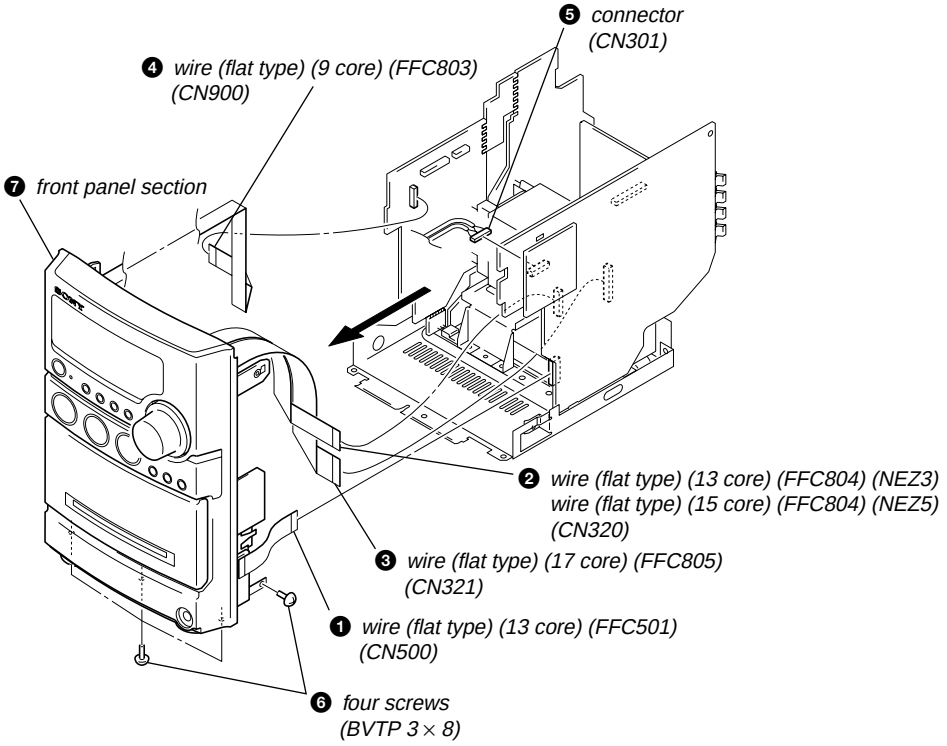

2-6. MECHANICAL DECK (CMAL5Z231)

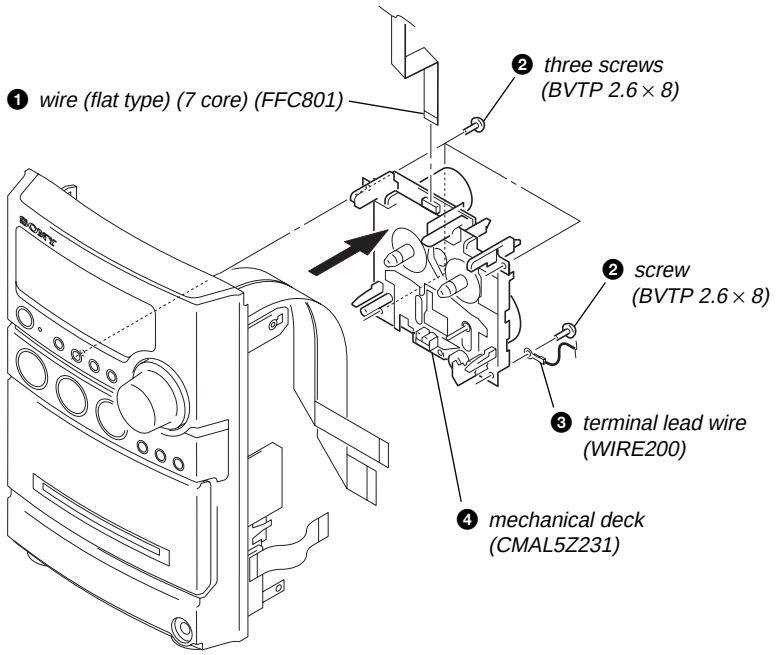

2-7. MAIN BOARD

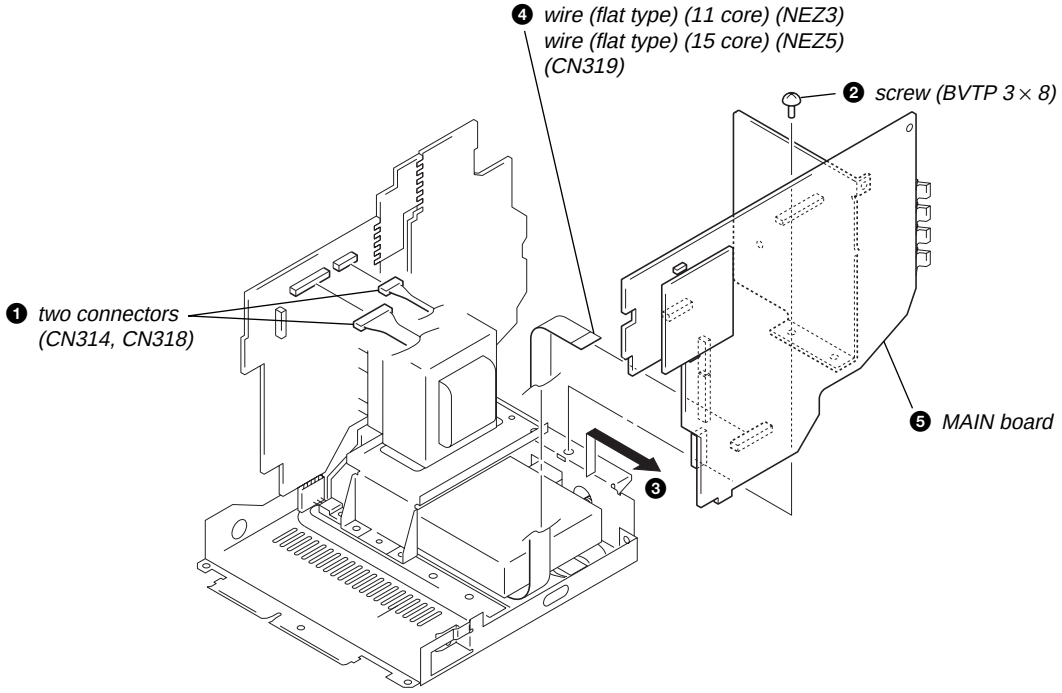

2-8. TUNER UNIT

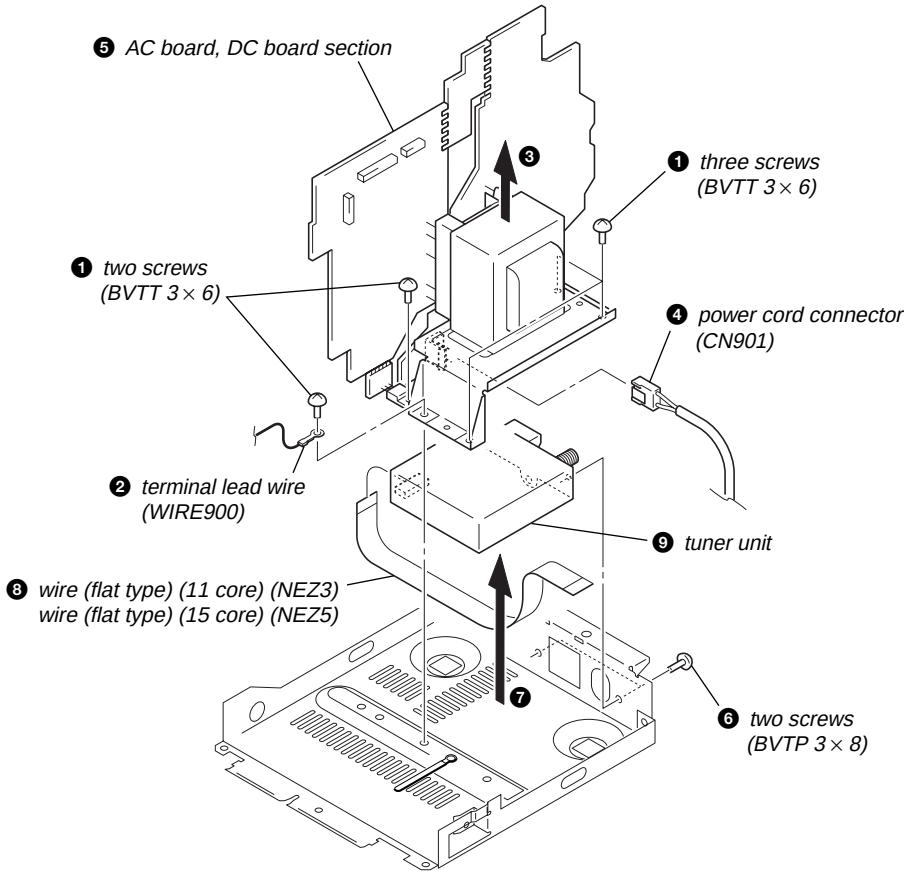

3. ELECTRICAL ADJUSTMENTS

DECK SECTION | 0 dB=0.775 V

1. Demagnetize the record/playback head with a head demagnetizer.
2. Do not use a magnetized screwdriver for the adjustments.

- **Test Tape**

Tape	Signal	Used for
P-4-A063	6.3 kHz, -10 dB	Azimuth Adjustment

RECORD/PLAYBACK HEAD AZIMUTH ADJUSTMENT

Note: Remove the cover (azimuth) before this adjustment.

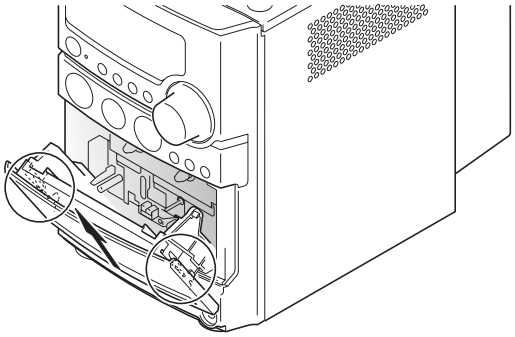

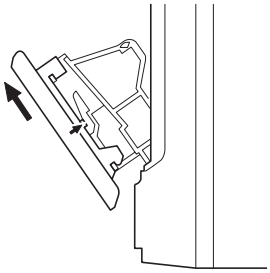

Procedure:

1. Mode: Playback

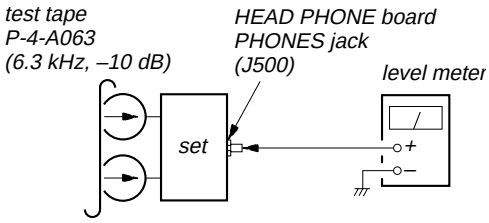

2. Turn the adjustment screw and check output peaks. If the peaks do not match for L-CH and R-CH, turn the adjustment screw so that outputs match within 1dB of peak.

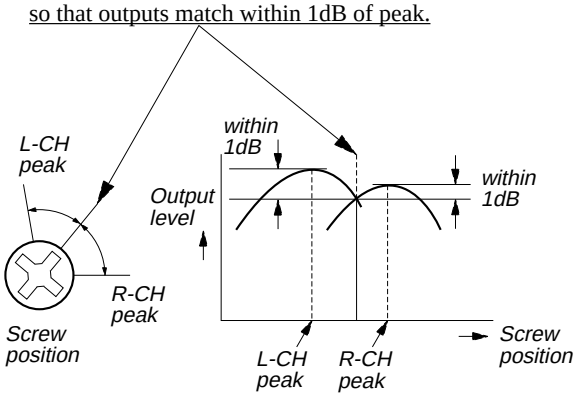

3. Mode: Playback

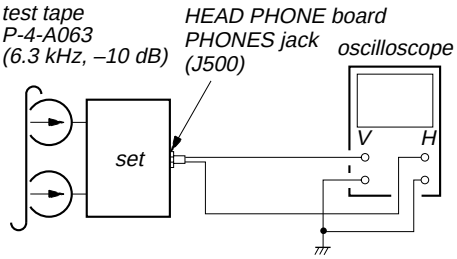

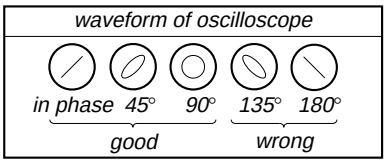

4. After the adjustments, apply suitable locking compound to the pats adjusted.

Adjustment Location: Record/Playback/Erase Head

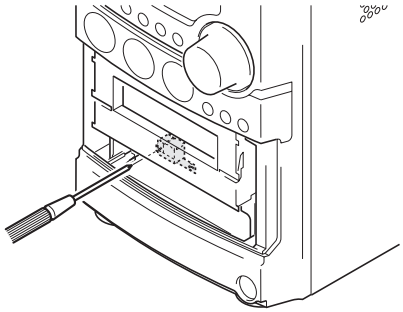

CD SECTION

Note:

1. CD Block is basically constructed to operate without adjustment.
2. Use YEDS-18 disc (3-702-101-01) unless otherwise indicated.
3. Use an oscilloscope with more than 10 MW impedance.
4. Clean the object lens by an applicator with neutral detergent when the signal level is low than specified value with the following checks.
5. Check the focus bias check when optical pick-up block is replaced.

FOCUS BIAS CHECK

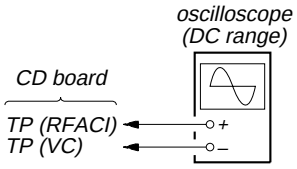

Procedure :

1. Connect oscilloscope to TP (RFACI) and TP (VC) on the CD board.
2. Press the I/⏻ button to turn the power ON.
3. Set disc (YEDS-18) on the tray and press the CD ▶II button to playback.
4. Confirm that oscilloscope waveform is as shown in the figure below. (eye pattern)
   A good eye pattern means that the diamond shape (◊) in the center of the waveform can be clearly distinguished.

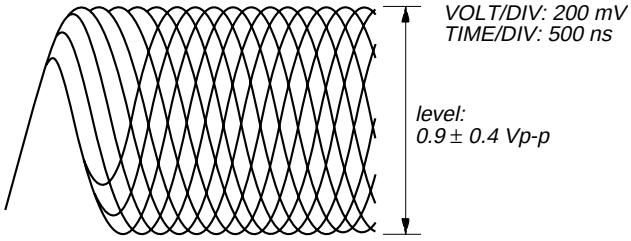

Checking Location:

– CD Board (Conductor Side) –

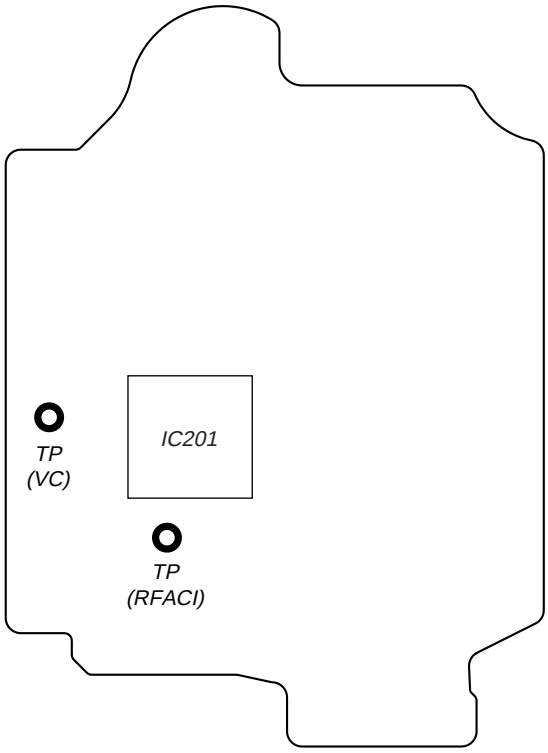

4. DIAGRAMS

4-1. BLOCK DIAGRAM – CD SERVO Section –

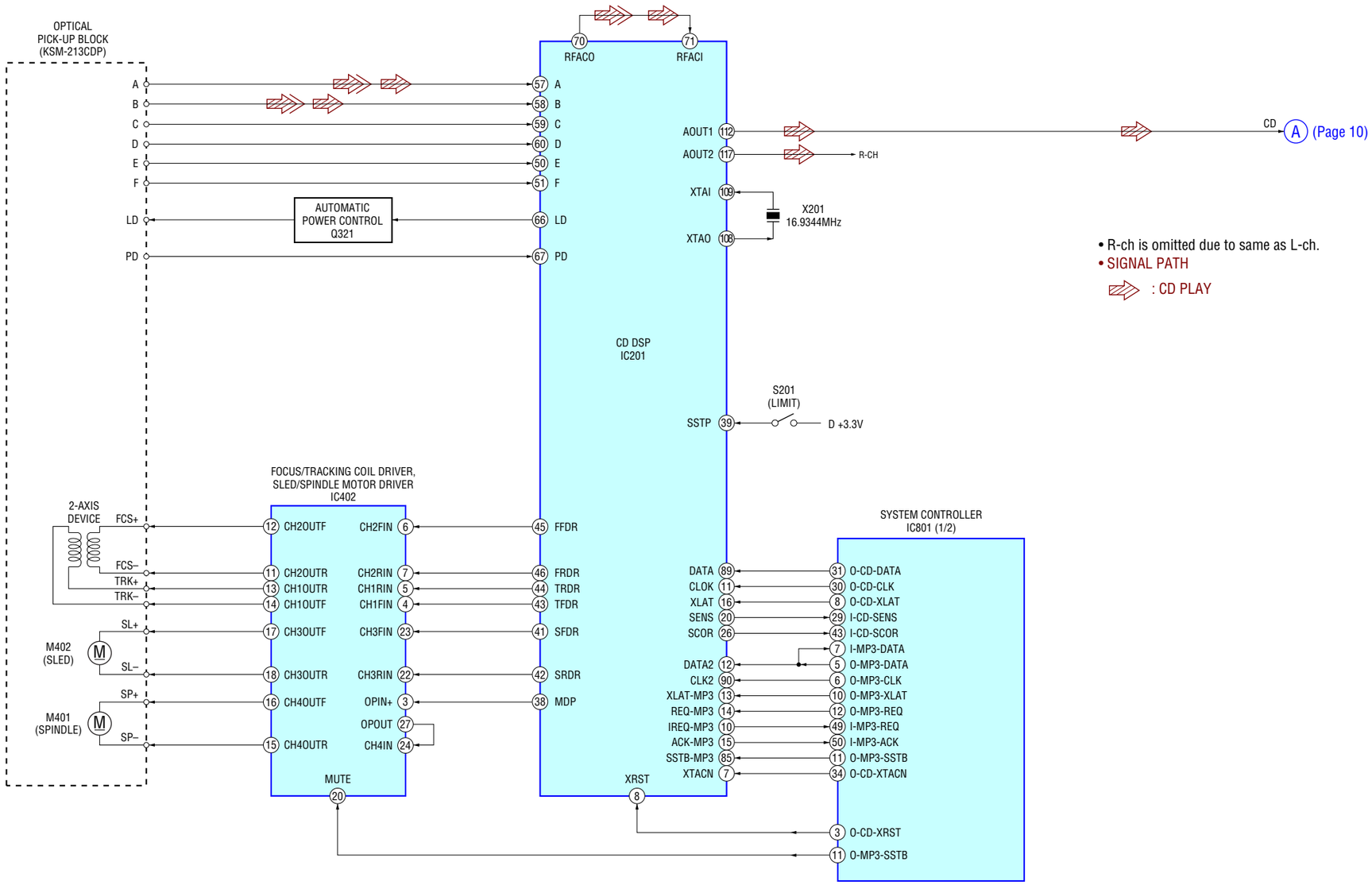

• R-ch is omitted due to same as L-ch.
• SIGNAL PATH
: CD PLAY

4-2. BLOCK DIAGRAM – MAIN Section –

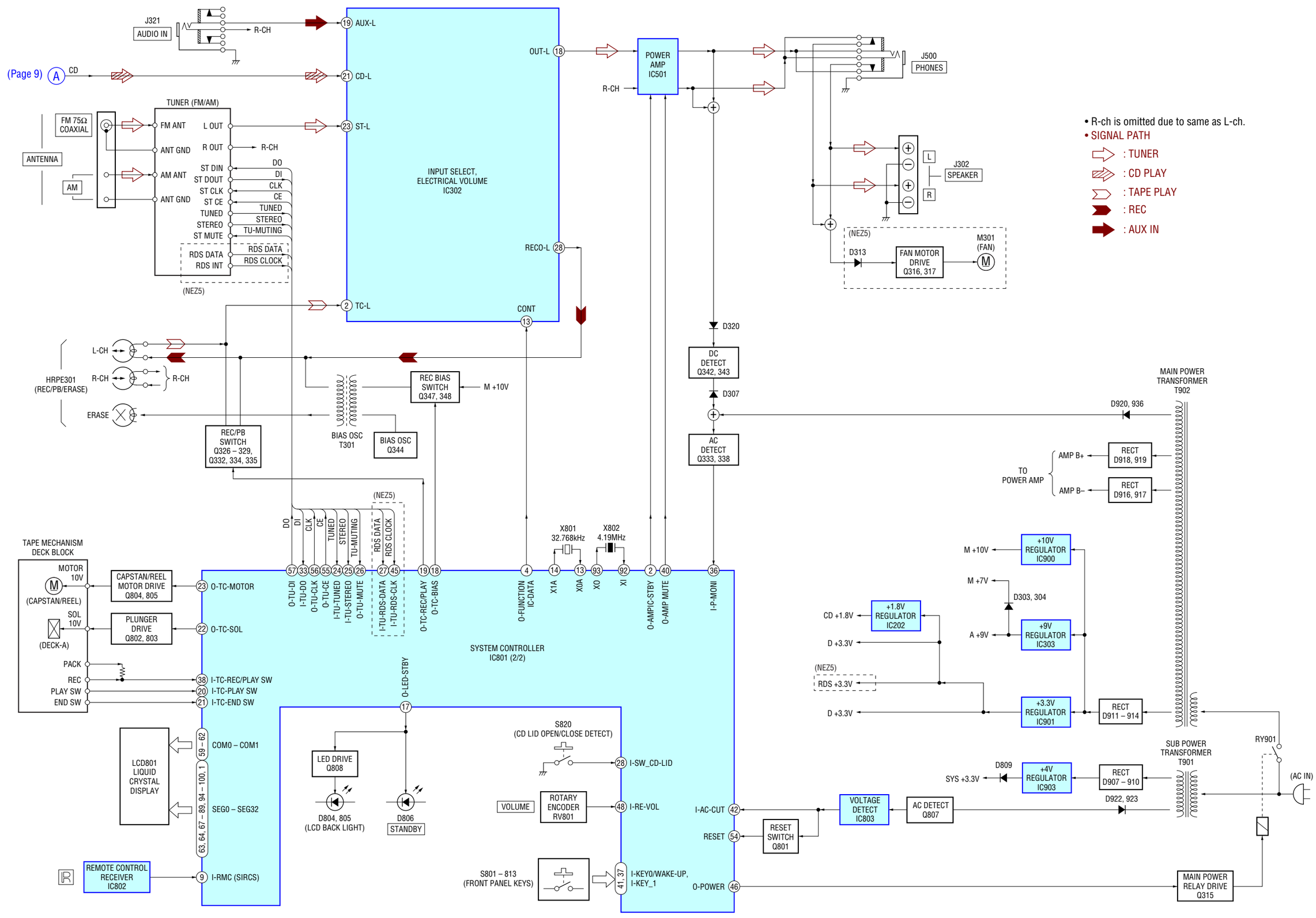

• Note for Printed Wiring Boards and Schematic Diagrams

Note on Printed Wiring Board:

- ○——— : parts extracted from the component side.
- ——— : parts extracted from the conductor side.
- △ : internal component.
- ▬ : Pattern from the side which enables seeing.

(The other layers' patterns are not indicated.)

Caution:	
Pattern face side: (Conductor Side)	Parts on the pattern face side seen from the pattern face are indicated.
Parts face side: (Component Side)	Parts on the parts face side seen from the parts face are indicated.

- Indication of transistor

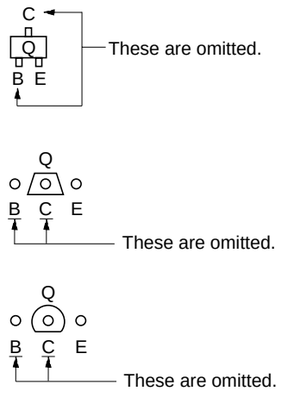

Note on Schematic Diagram:

- All capacitors are in µF unless otherwise noted. (p: pF) 50 WV or less are not indicated except for electrolytics and tantalums.
- All resistors are in Ω and 1/4 W or less unless otherwise specified.
- △ : internal component.
- : nonflammable resistor.
- : fusible resistor.
- ▭ : panel designation.

Note:	Note:
The components identified by mark ⚠ or dotted line with mark ⚠ are critical for safety. Replace only with part number specified.	Les composants identifiés par une marque ⚠ sont critiques pour la sécurité. Ne les remplacer que par une pièce portant le numéro spécifié.

- ▬▬ : B+ Line.
- ▬ ▬ ▬ : B– Line.
- Voltages and waveforms are dc with respect to ground under no-signal conditions.
  – CD Board –
  no mark : CD PLAY
  – Other Section –
  no mark : TUNER
  ( ) : CD PLAY
  《 》 : TAPE PLAY
  { } : REC
- Voltages are taken with a VOM (Input impedance 10 MΩ). Voltage variations may be noted due to normal production tolerances.
- Waveforms are taken with a oscilloscope. Voltage variations may be noted due to normal production tolerances.
- Circled numbers refer to waveforms.
- Signal path.
  ⇨ : TUNER
  ⇨ : CD PLAY
  ⇨ : TAPE PLAY
  ➡ : REC
  ➡ : AUX IN
- Abbreviation
  CND : Canadian model

• Circuit Boards Location

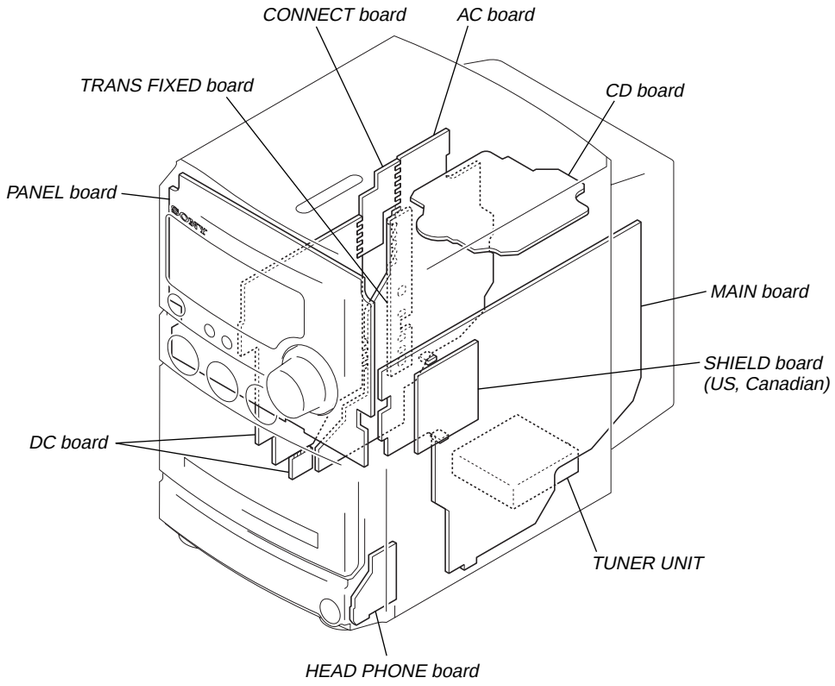

4-3. PRINTED WIRING BOARD – CD Board –

• See page 11 for Circuit Boards Location. : Uses unleaded solder.

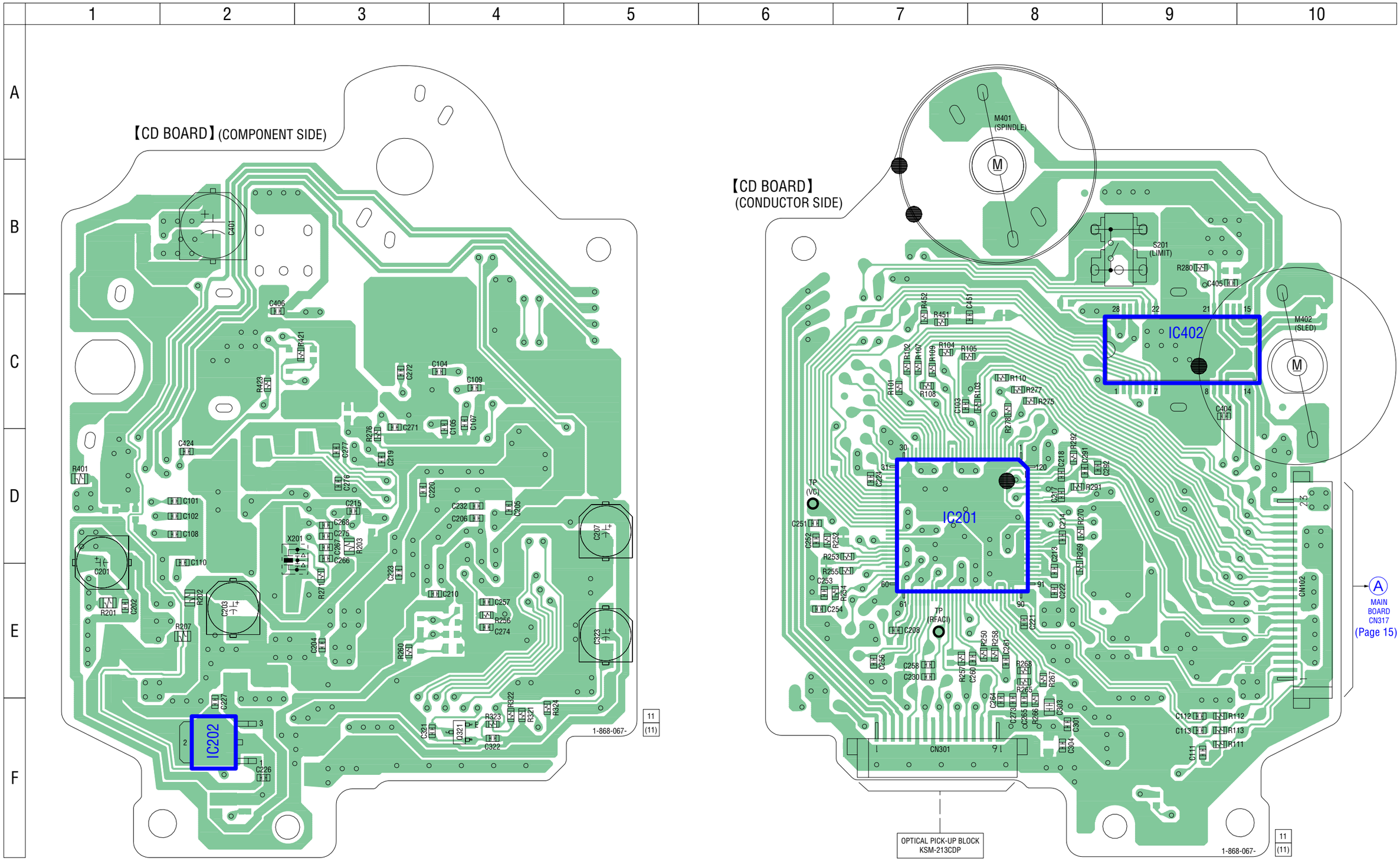

4-4. SCHEMATIC DIAGRAM – CD Board –

• See page 14 for Waveforms. • See page 23 for IC Block Diagrams. • See page 24 for IC Pin Function Description.

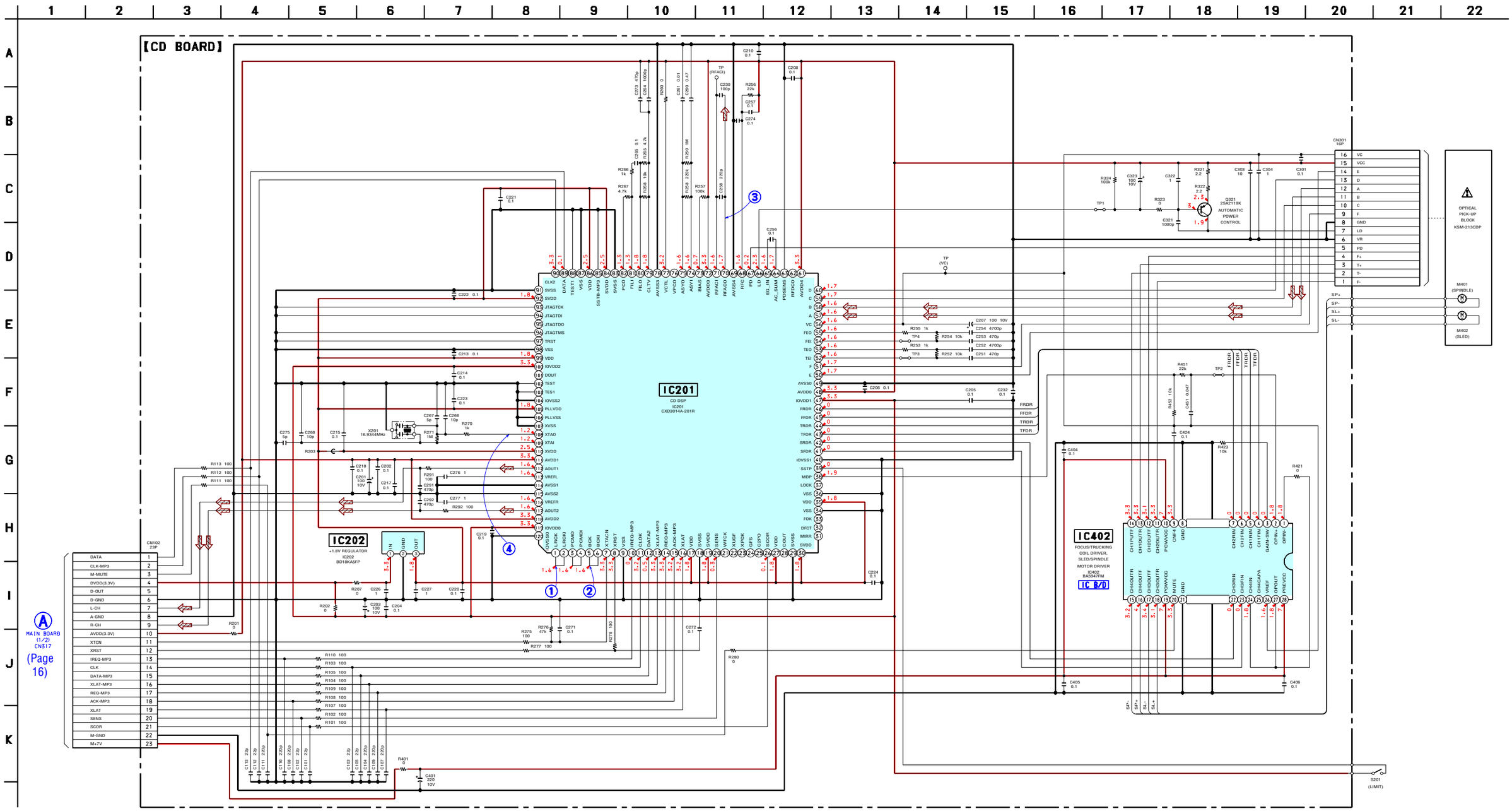

- **Waveforms**

– CD Board –

① IC201 ① (LRCK)
(CD PLAY mode)

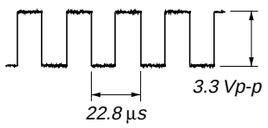

1 V/DIV, 10 µs/DIV

② IC201 ⑤ (BCK)
(CD PLAY mode)

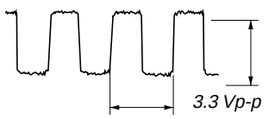

1 V/DIV, 200 ns/DIV

③ IC201 ⑦⓪ (RFACO)
(CD PLAY mode)

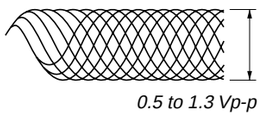

200 mV/DIV, 500 ns/DIV

④ IC201 ⑩⓪ (XTAO)
(CD PLAY mode)

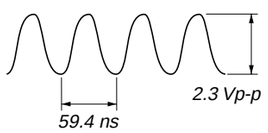

1 V/DIV, 20 ns/DIV

– MAIN Board –

⑪ T301 ④
(REC mode)

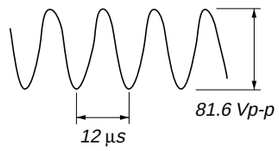

50 V/DIV, 5 µs/DIV

⑫ Q344 (Collector)
(REC mode)

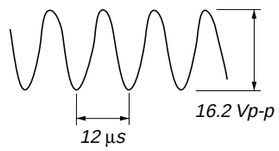

5 V/DIV, 5 µs/DIV

– PANEL Board –

㉑ IC801 ⑭ (X1A)

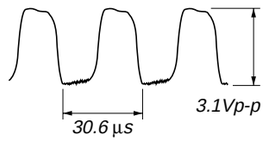

1 V/DIV, 10 µs/DIV

㉒ IC801 ⑨③ (XO)
(CD play mode)

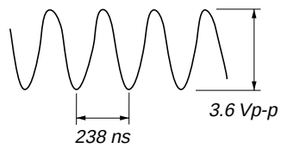

1 V/DIV, 100 ns/DIV

4-5. PRINTED WIRING BOARDS – MAIN Section –

• See page 11 for Circuit Boards Location. : Uses unleaded solder.

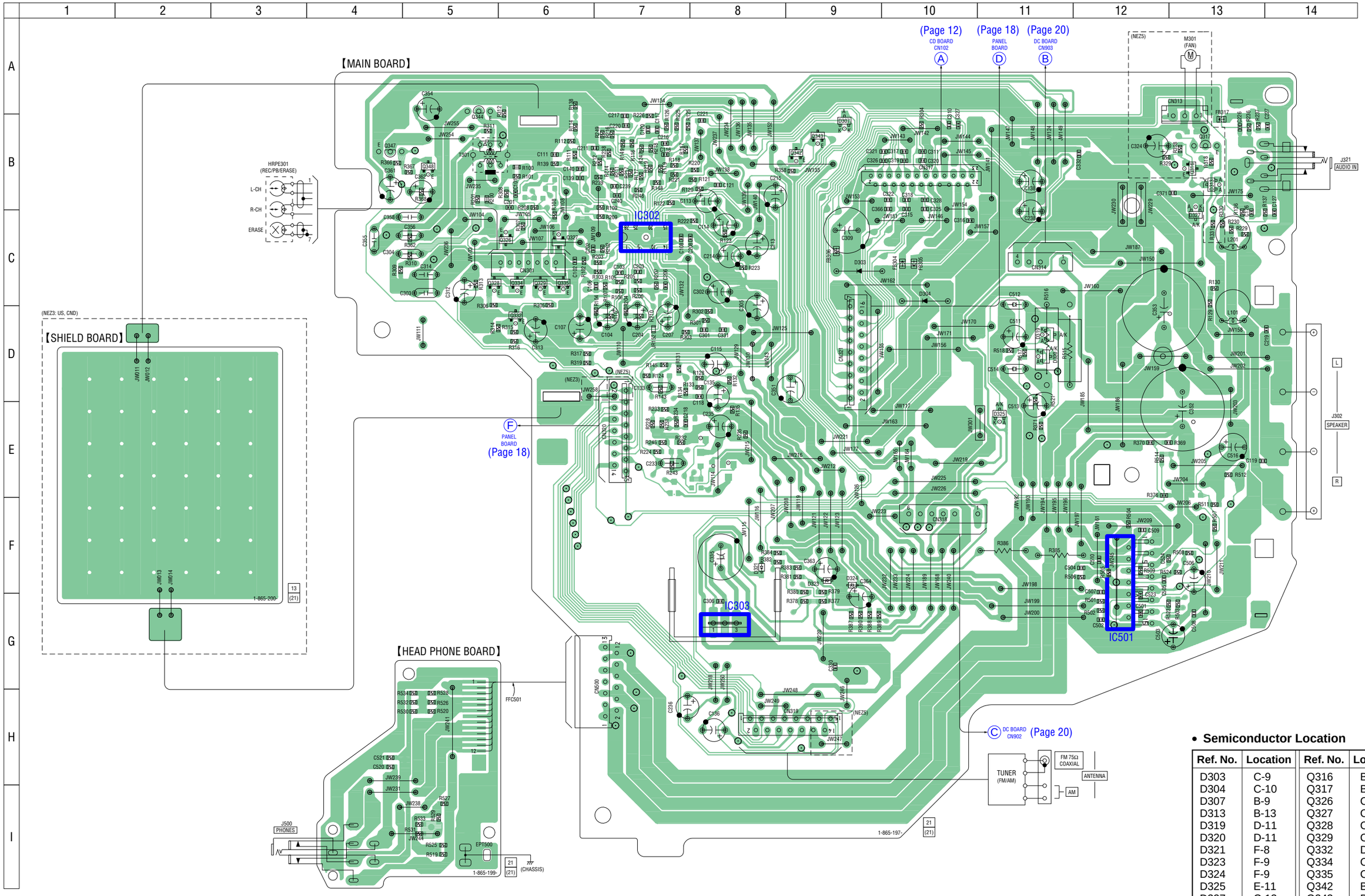

• **Semiconductor Location**

Ref. No.	Location	Ref. No.	Location
D303	C-9	Q316	B-13
D304	C-10	Q317	B-13
D307	B-9	Q326	C-6
D313	B-13	Q327	C-6
D319	D-11	Q328	C-5
D320	D-11	Q329	C-6
D321	F-8	Q332	D-6
D323	F-9	Q334	C-6
D324	F-9	Q335	C-6
D325	E-11	Q342	B-9
D327	C-13	Q343	B-9
		Q344	A-5
IC302	C-7	Q347	B-4
IC303	G-8	Q348	B-5
IC501	F-12		

4-6. SCHEMATIC DIAGRAM – MAIN Section (1/2) –

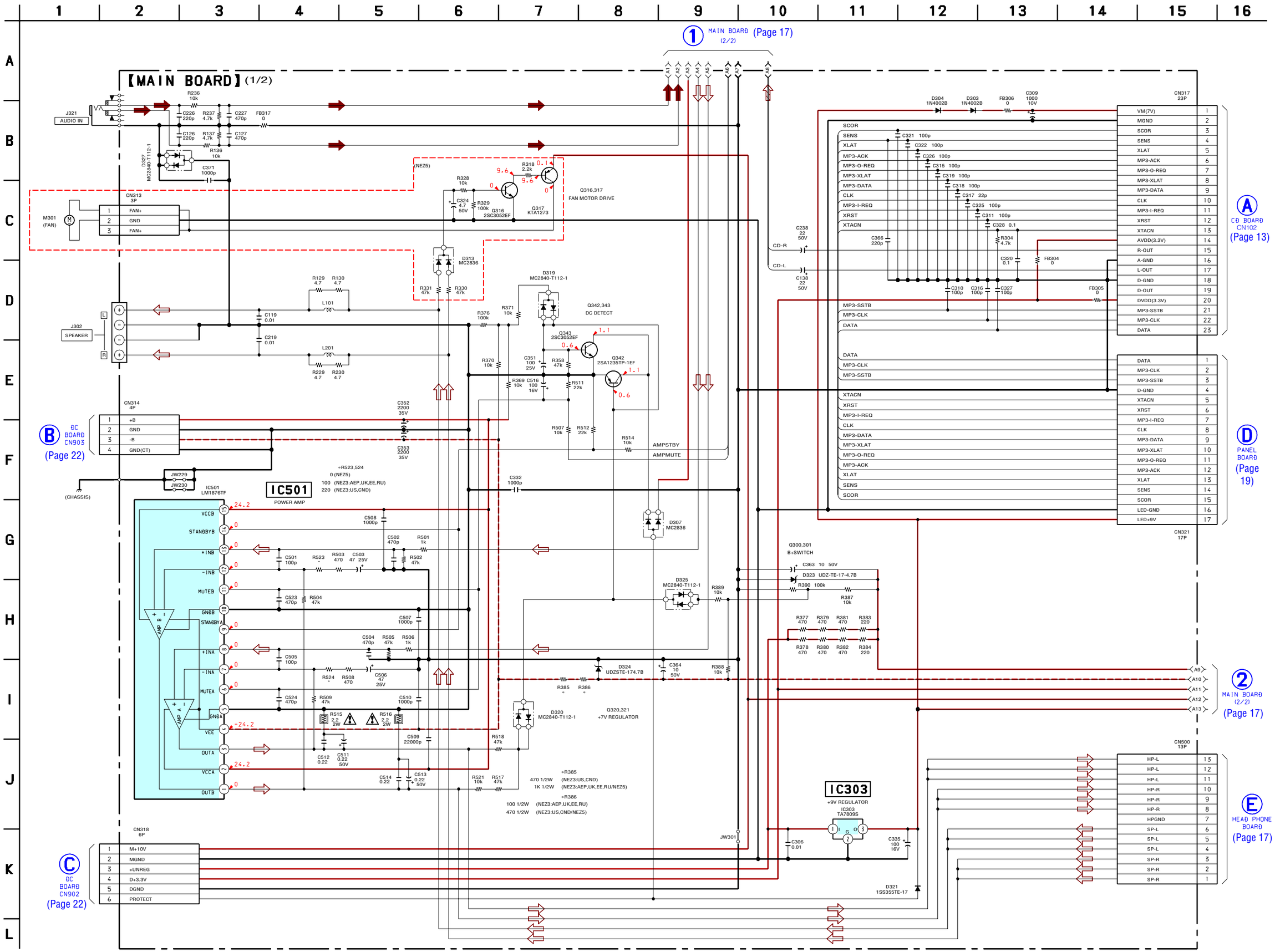

4-7. SCHEMATIC DIAGRAM – MAIN Section (2/2) –

• See page 23 for IC Block Diagrams.

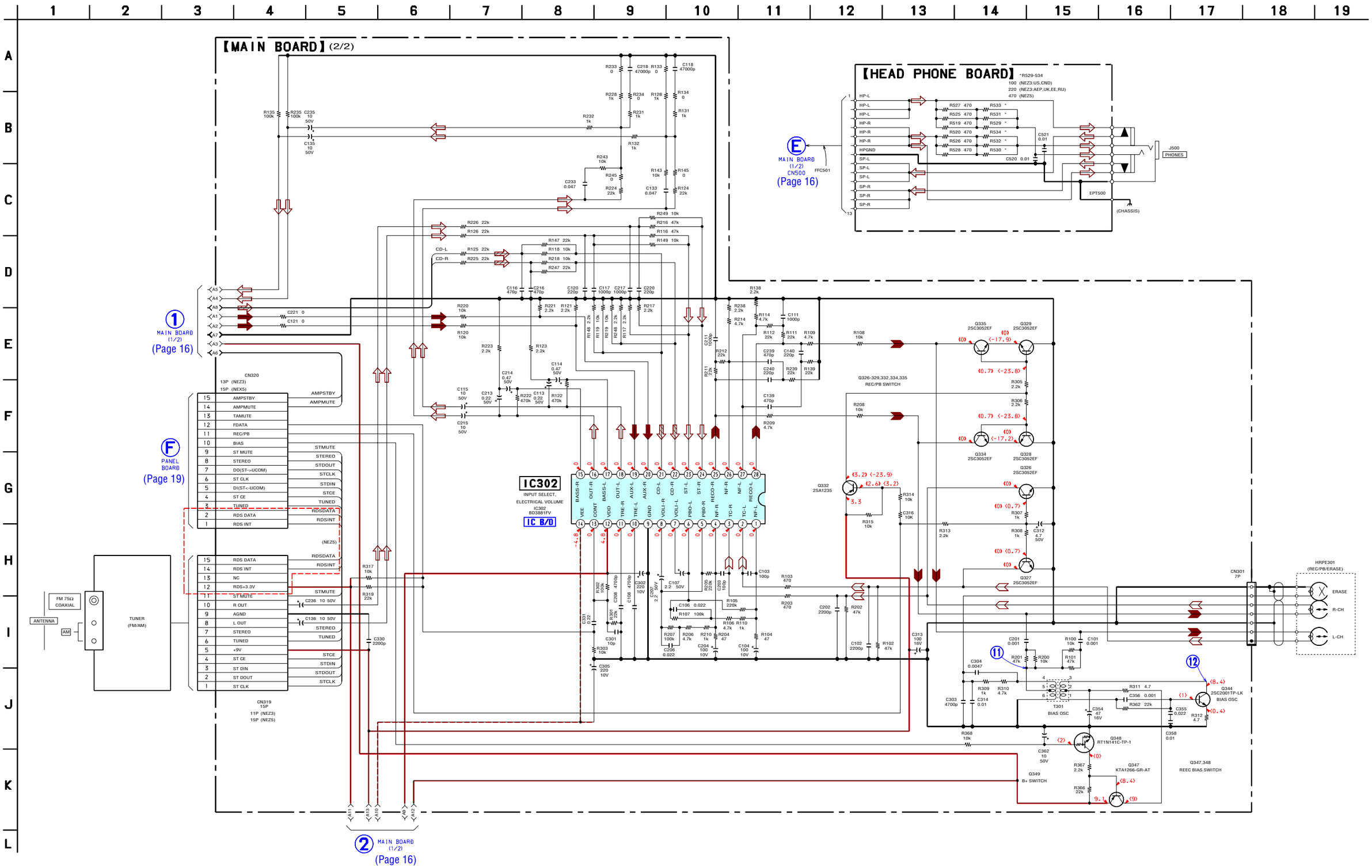

4-8. PRINTED WIRING BOARD – PANEL Board –

• See page 11 for Circuit Boards Location.

: Uses unleaded solder.

- **Semiconductor Location**

Ref. No.	Location
D801	G-7
D804	C-4
D805	C-4
D806	F-8
D807	C-9
D809	C-9
IC801	D-7
IC802	D-9
IC803	B-9
Q801	C-8
Q802	G-5
Q803	G-4
Q804	G-5
Q805	G-4
Q807	B-8
Q808	C-4

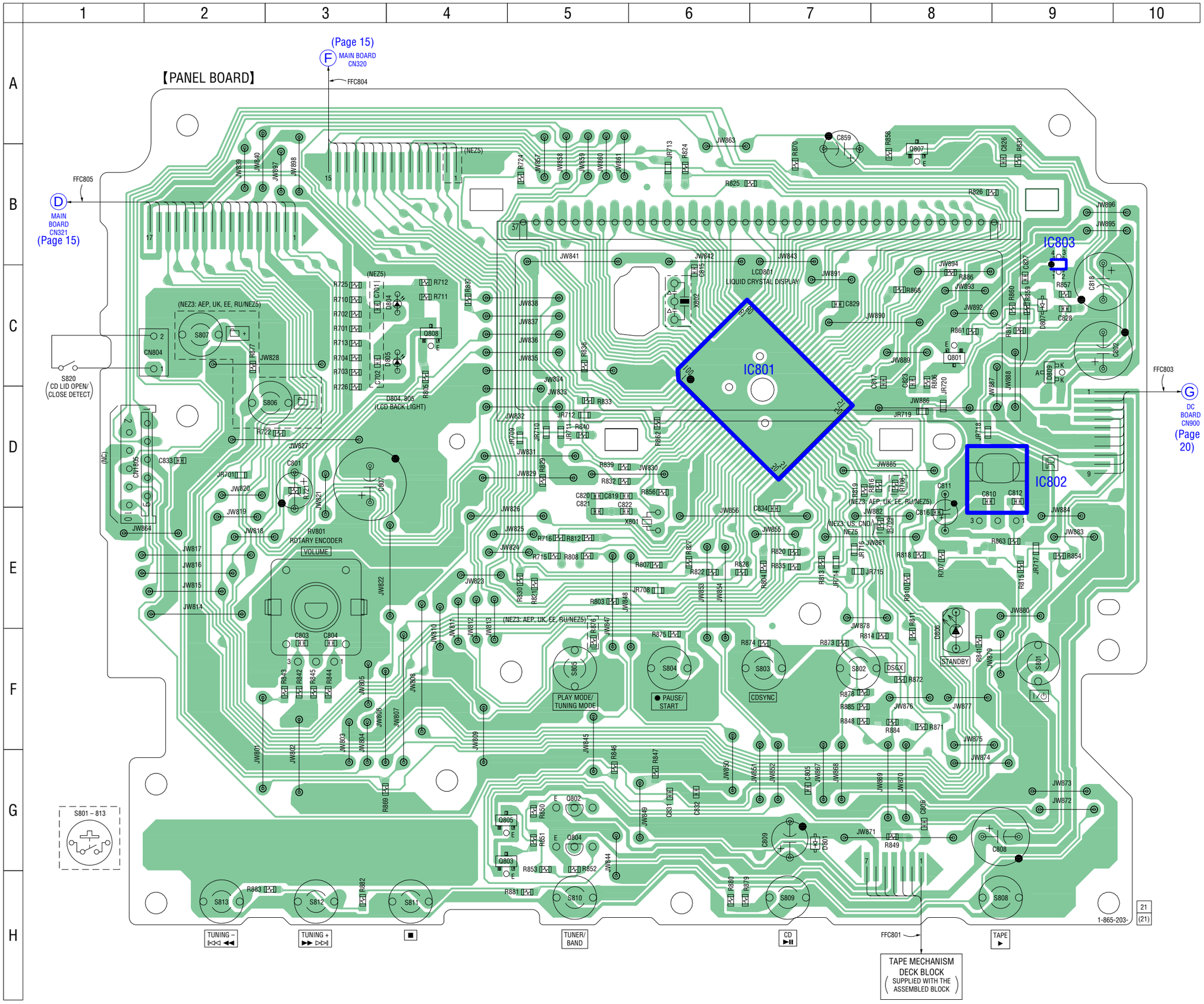

4-9. SCHEMATIC DIAGRAM – PANEL Board –

• See page 14 for Waveforms. • See page 24 for IC Pin Function Description.

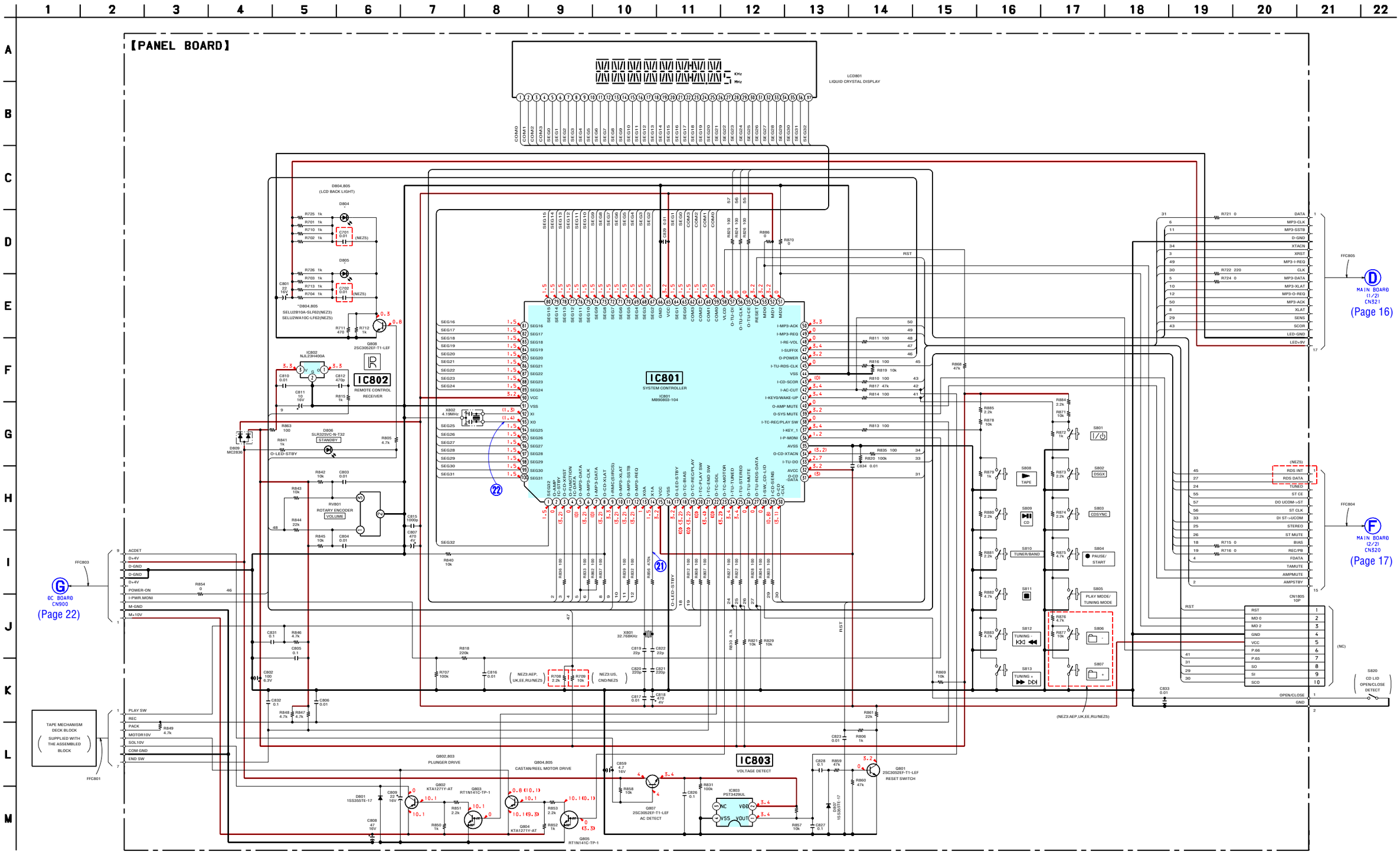

4-10. PRINTED WIRING BOARDS – DC Section –

• See page 11 for Circuit Boards Location. : Uses unleaded solder.

• **Semiconductor Location**

Ref. No.	Location
D322	H-4
D911	F-3
D912	F-3
D913	F-3
D914	F-3
D916	E-7
D917	D-7
D918	E-7
D919	F-7
D920	E-4
D926	F-6
D927	F-6
D928	F-6
D936	F-4
IC900	F-1
IC901	G-6
IC903	H-9
Q315	H-8
Q333	H-4
Q338	H-4

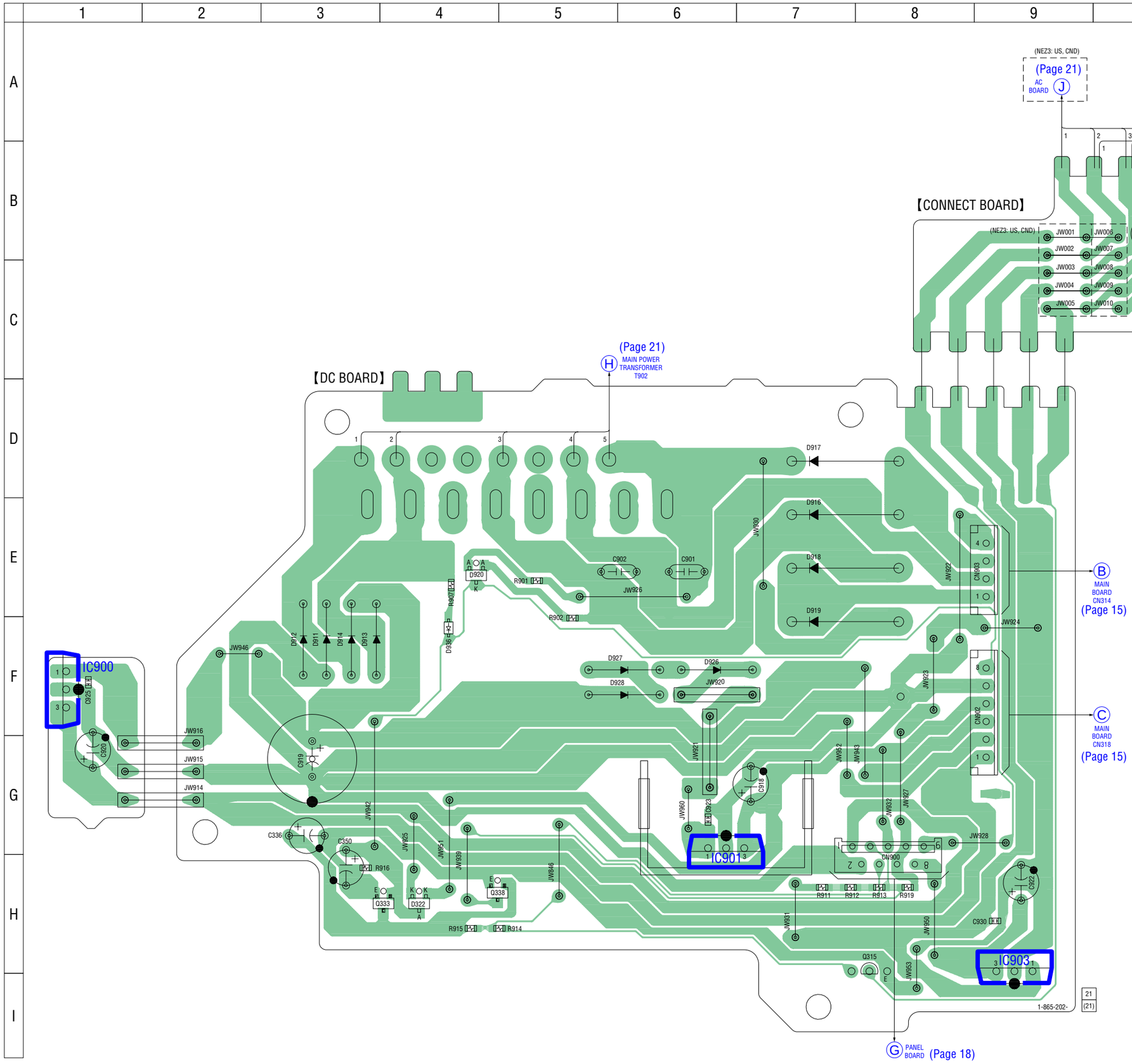

4-11. PRINTED WIRING BOARD – AC Board –

• See page 11 for Circuit Boards Location. : Uses unleaded solder.

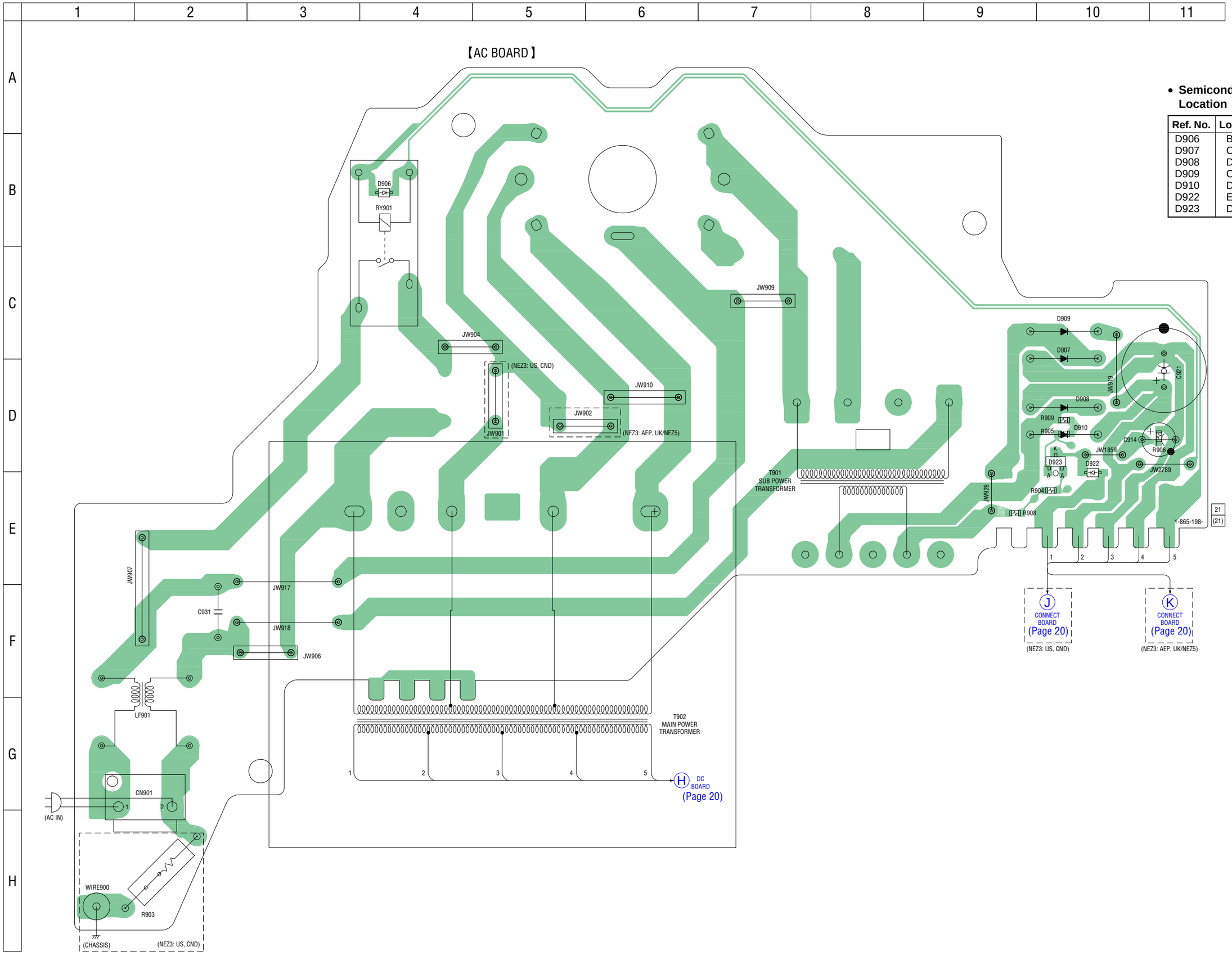

• **Semiconductor Location**

Ref. No.	Location
D906	B-4
D907	C-10
D908	D-10
D909	C-10
D910	D-10
D922	E-10
D923	D-10

4-12. SCHEMATIC DIAGRAM – POWER SUPPLY Section –

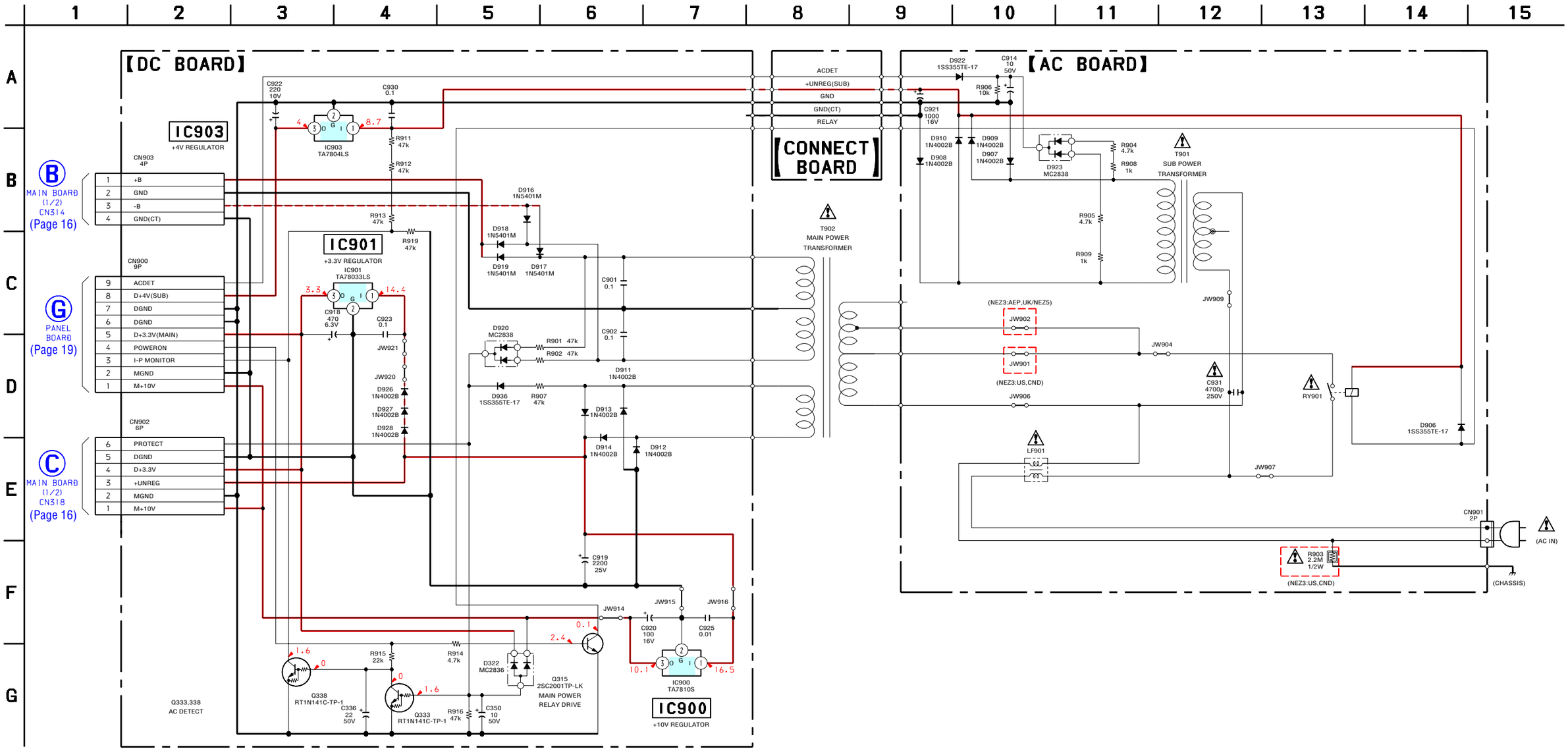

- **IC Block Diagrams**

– CD Board –

IC402 BA5947FM-E2

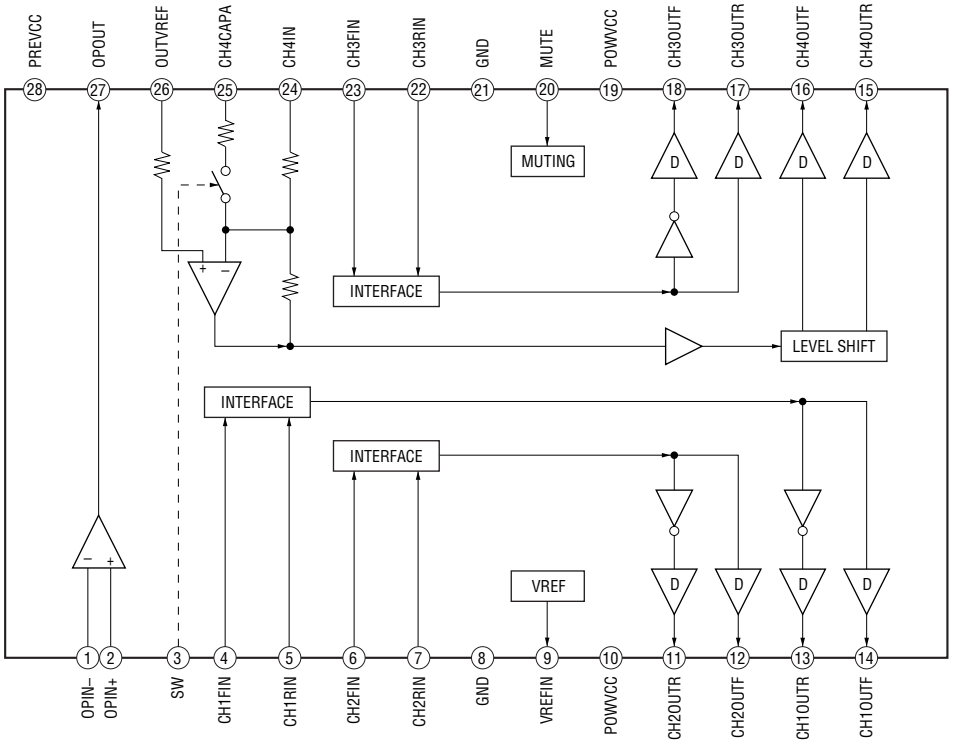

– MAIN Board –

IC301 BD3881FV

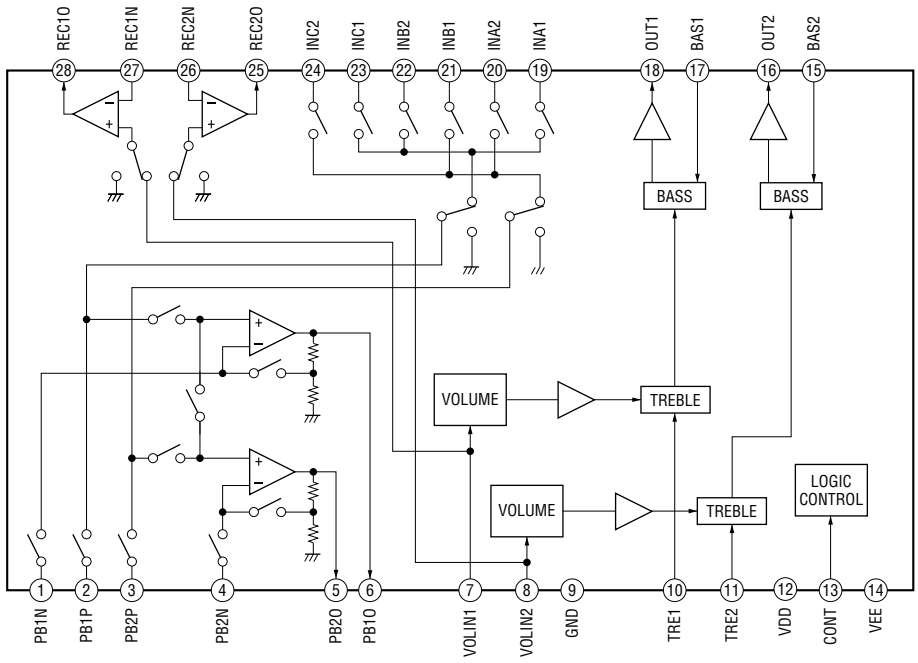

- **IC PIN FUNCTION DESCRIPITION**

CD BOARD IC201 CXD3014A-201R (CD DSP)

Pin No.	Pin Name	I/O	Description
1	LRCK	O	L/R sampling clock signal output terminal
2	LRCKI	I	L/R sampling clock signal input terminal
3	PCMD	O	Serial data output terminal
4	PCMDI	I	Serial data input terminal
5	BCK	O	Bit clock signal output terminal
6	BCKI	I	Bit clock signal input terminal
7	XTACN	I	Oscillation circuit on/off switch control signal input from the system controller "L": oscillation stop, "H": self-oscillation
8	XRST	I	System reset signal input from the system controller "L": reset
9	VSS	-	Ground terminal
10	IREQ-MP3	O	MP3 data request signal output to the system controller
11	CLOK	I	CD serial data transfer clock signal input from the system controller
12	DATA2	I	MP3 serial data input from the system controller
13	XLAT-MP3	I	MP3 serial data latch pulse signal input from the system controller
14	REQ-MP3	I	MP3 data request signal input from the system controller
15	ACK-MP3	O	MP3 acknowledge signal output to the system controller
16	XLAT	I	CD serial data latch pulse signal input from the system controller
17	VDD	-	Power supply terminal (+1.8V)
18	SVSS	-	Ground terminal
19	SVDD	-	Power supply terminal (+1.8V)
20	SENS	O	Internal status (SENSE) signal output to the system controller
21	WFCK	-	Not used
22	XUGF	-	Not used
23	XPCK	-	Not used
24	GFS	-	Not used
25	C2PO	-	Not used
26	SCOR	O	Subcode sync (S0+S1) detection signal output to the system controller
27	VDD	-	Power supply terminal (+1.8V)
28	COUT	-	Not used
29	SVSS	-	Ground terminal
30	SVDD	-	Power supply terminal (+1.8V)
31	MIRR	-	Not used
32	DFCT	-	Not used
33	FOK	-	Not used
34	VSS	-	Ground terminal
35	VDD	-	Power supply terminal (+1.8V)
36	VSS	-	Ground terminal
37	MIRR	-	Not used
38	MDP	O	Spindle motor servo control signal output terminal
39	SSTP	I	Disc inner position detection signal input terminal
40	IOVSS1	-	Ground terminal
41	SFDR	O	Sled servo drive signal (+) output to the coil/motor driver
42	SRDR	O	Sled servo drive signal (-) output to the coil/motor driver
43	TFDR	O	Tracking servo drive signal (+) output to the coil/motor driver
44	TRDR	O	Tracking servo drive signal (-) output to the coil/motor driver
45	FFDR	O	Focus servo drive signal (+) output to the coil/motor driver
46	FRDR	O	Focus servo drive signal (-) output to the coil/motor driver
47	IOVDD1	-	Power supply terminal (+3.3V)

Pin No.	Pin Name	I/O	Description
48	AVDD0	-	Power supply terminal (+3.3V)
49	AVSS0	-	Ground terminal
50	E	I	E signal input from the optical pick-up block
51	F	I	F signal input from the optical pick-up block
52	TEI	I	Tracking error signal input terminal
53	TEO	O	Tracking error signal output terminal
54	FEI	I	Focus error signal input terminal
55	FEO	O	Focus error signal output terminal
56	VC	O	Middle point voltage output terminal
57	A	I	A signal input from the optical pick-up block
58	B	I	B signal input from the optical pick-up block
59	C	I	C signal input from the optical pick-up block
60	D	I	D signal input from the optical pick-up block
61	AVDD4	-	Power supply terminal (+3.3V)
62	RFDCO	O	Not used
63	PDSENS	I	Not used
64	AC_SUM	O	RFAC summing amplifier signal output terminal
65	EQ_IN	I	RF equalizer circuit input terminal
66	LD	O	Laser diode on/off control signal output to the automatic power control circuit "L": laser off, "H": laser on
67	PD	I	Light amount monitor input from the optical pick-up block laser diode
68	RFC	I	Equalizer cut off frequency adjustment terminal
69	AVSS4	-	Ground terminal
70	RFACO	O	EFM signal output terminal
71	RFACI	I	EFM signal input terminal
72	AVDD3	-	Power supply terminal (+3.3V)
73	BIAS	I	Asymmetry circuit constant current input terminal
74	ASYI	I	Playback EFM asymmetry comparator voltage input terminal
75	ASYO	O	Playback EFM full-swing output terminal
76	VPCO	O	Charge pump output terminal for broad-band EFM PLL
77	VCTL	I	VCO2 control voltage input terminal for broad-band EFM PLL
78	AVSS3	-	Ground terminal
79	CLTV	I	VCO1 control voltage input terminal for multiplier
80	FILO	O	Filter output terminal for master PLL
81	FILI	I	Filter input terminal for master PLL
82	PCO	O	Charge pump output terminal for master PLL
83	SVSS	-	Ground terminal
84	SVDD	-	Power supply terminal (+1.8V)
85	SSTB-MP3	I	MP3 standby on/off control signal input terminal "L": standby Not used
86	VDD	-	Power supply terminal (+1.8V)
87	VSS	-	Ground terminal
88	TEST1	I	Test terminal Normally: fixed at "L"
89	DATA	I	CD serial data input from the system controller
90	CLK2	I	MP3 serial data transfer clock signal input from the system controller
91	SVSS	-	Ground terminal
92	SVDD	-	Power supply terminal (+2.5V)
93	JTAGTCK	-	Not used
94	JTAGTDI	-	Not used
95	JTAGTDO	-	Not used
96	JTAGTMS	-	Not used

Pin No.	Pin Name	I/O	Description
97	TRST	-	Not used
98	VSS	-	Ground terminal
99	VDD	-	Power supply terminal (+1.8V)
100	IOVDD2	-	Power supply terminal (+3.3V)
101	DOUT	O	Digital audio signal output terminal Not used
102	TEST	I	Test terminal Normally: fixed at "L"
103	TES1	I	Test terminal Normally: fixed at "L"
104	IOVSS2	-	Ground terminal
105	PLLVDD	-	Power supply terminal (+1.8V)
106	PLLVSS	-	Ground terminal
107	XVSS	-	Ground terminal
108	XTAO	O	System clock output terminal (16.9344 MHz)
109	XTAI	I	System clock input terminal (16.9344 MHz)
110	XVDD	-	Power supply terminal (+1.8V)
111	AVDD1	-	Power supply terminal (+3.3V)
112	AOUT1	O	L-ch analog audio signal output terminal
113	VREFL	O	L-ch reference voltage output terminal
114	AVSS1	-	Ground terminal
115	AVSS2	-	Ground terminal
116	VREFR	O	R-ch reference voltage output terminal
117	AOUT2	O	R-ch analog audio signal output terminal
118	AVDD1	-	Power supply terminal (+3.3V)
119	IOVDD0	-	Power supply terminal (+3.3V)
120	IOVSS0	-	Ground terminal

PANEL BOARD IC801 MB90803-104 (SYSTEM CONTROLLER)

Pin No.	Pin Name	I/O	Description
1	SEG32	O	Segment drive signal output to the liquid crystal display
2	O-AMPICSTBY	O	Standby control signal output to the power amplifier
3	O-CD-XRST	O	System reset signal output to the CD DSP
4	O-FUNCTION IC-DATA	O	Serial data output to the electrical volume
5	O-MP3-DATA	O	MP3 serial data output to the CD DSP
6	O-MP3-CLK	O	MP3 serial data transfer clock signal output to the CD DSP
7	I-MP3-DATA	I	MP3 serial data input terminal
8	O-CD-XLAT	O	CD serial data latch pulse signa output to the CD DSP
9	I-RMC (SIRCS)	I	Remote control signal input from the remote control receiver
10	O-XLAT-MP3	O	MP3 serial data latch pulse signal output to the CD DSP
11	O-MP3-SSTB	O	System reset signal output to the motor/coil driver
12	O-REQ-MP3	O	MP3 data request signal output to the CD DSP
13	X0A	I	Sub system clock input terminal (32.768 kHz)
14	X1A	O	Sub system clock output terminal (32.768 kHz)
15	VCC	-	Power supply terminal (+3.2V)
16	VSS	-	Ground terminal
17	O-LED-STBY	O	LED drive signal output terminal for STANDBY indicater
18	O-TC-BIAS	O	Recording bias on/off selection signal output terminal "H": bias on, "L": bias off
19	O-TC-REC/PB	O	Recording/playback selection signal output terminal "H": playback mode, "L": recording mode
20	I-TC-PLAY SW	I	PLAY switch signal input from the tape mechanism deck
21	I-TC-END SW	I	END switch signal input from the tape mechanism deck
22	O-TC-SOL	O	Trigger plunger on/off control signal output terminal "H": plunger on
23	O-TC-MOTOR	O	Capstan/reel motor on/off control signal output terminal "H": motor on
24	I-TU-TUNED	I	Tuning detection signal input from the tuner (FM/AM)
25	I-TU-STEREO	I	FM stereo detection signal input from the tuner (FM/AM)
26	O-TU-MUTE	O	Tuner muting on/off control signal output to the tuner (FM/AM)
27	I-TU-RDS-DATA	I	RDS serial data input from the tuner (FM/AM) (NEZ5 only)
28	I-SW_CD-LID	I	CD lid open/close detection switch input terminal "L": CD lid close
29	I-CD-SENS	I	Internal status (SENSE) signal input from the CD DSP
30	O-CD-CLK	O	CD serial data transfer clock signal output to the CD DSP
31	O-CD-DATA	O	CD serial data output to the CD DSP
32	AVCC	-	Power supply terminal (+3.2V)
33	I-TU-DO	I	Serial data input from the tuner (FM/AM)
34	O-CD-XTACN	O	Oscillator control signal output to the CD DSP
35	AVSS	-	Ground terminal
36	I-P-MONI	I	Power monitor input terminal
37	I-KEY_1	I	Front panel key input terminal (A/D input)
38	I-TC-REC/PLAY	I	Recording-proof claw (forward/reverse) detect switch and cassette in detect switch input terminal
39	O-SYS MUTE	O	Line muting on/off control signal output terminal Not used
40	O-AMP MUTE	O	Tuner muting on/off control signal output to the power amplifier
41	I-KEY0/WAKE-UP	I	Key interruption processing start signal and front panel key input terminal (A/D input)
42	ACCUT	I	Power down detection signal input terminal "L": power down, normally : "H"
43	I-CD-SCOR	I	Subcode sync (S0+S1) detection signal input from the CD DSP
44	VSS	-	Ground terminal
45	I-TU-RDS-CLK	I	RDS serial data transfer clock signal input from the tuner (FM/AM) (NEZ5 only)

Pin No.	Pin Name	I/O	Description
46	O-POWER	O	Power relay drive signal output terminal "H": on
47	I-SUFFIX	I	Model destination setting terminal
48	I-RE-VOL	I	Dial pulse input of the rotary encoder (for VOLUME control)
49	I-MP3-REQ	I	MP3 data request signal input from the CD DSP
50	I-MP3-ACK	I	MP3 acknowledge signal input from the CD DSP
51 to 53	MD2 to MD0	-	Not used
54	RESET	I	Reset signal input from the reset switch "L": reset For several hundreds msec. after the power supply rises, "L" is input, then it changes to "H"
55	O-TU-CE	O	Chip enable signal output to the tuner (FM/AM)
56	O-TU-CLK	O	serial data transfer clock signal output to the tuner (FM/AM)
57	O-TU-DI	O	Serial data output to the tuner (FM/AM)
58	VLCD	-	Terminal for doubler circuit capacitor connection to develop liquid crystal display drive voltage
59 to 62	COM0 to COM3	O	Common drive signal output to the liquid crystal display
63, 64	SEG0, SEG1	O	Segment drive signal output to the liquid crystal display
65	VCC	-	Power supply terminal (+3.2V)
66	GND	-	Ground terminal
67 to 89	SEG2 to SEG24	O	Segment drive signal output to the liquid crystal display
90	VCC	-	Power supply terminal (+3.2V)
91	VSS	-	Ground terminal
92	XI	I	Main system clock input terminal (4.19 MHz)
93	XO	O	Main system clock output terminal (4.19 MHz)
94 to 100	SEG25 to SEG31	O	Segment drive signal output to the liquid crystal display

5. EXPLODED VIEW

NOTE:

- -XX and -X mean standardized parts, so they may have some difference from the original one.
- Color Indication of Appearance Parts
  Example:
  KNOB, BALANCE (WHITE) . . . (RED)
  ↑ Parts Color ↑ Cabinet's Color
- Abbreviation
  CND : Canadian model
  EE : East European model
  RU : Russian model
- Items marked "*" are not stocked since they are seldom required for routine service. Some delay should be anticipated when ordering these items.
- The mechanical parts with no reference number in the exploded views are not supplied.
- Accessories are given in the last of the electrical parts list.

The components identified by mark ⚠ or dotted line with mark ⚠ are critical for safety.
Replace only with part number specified.

Les composants identifiés par une marque ⚠ sont critiquens pour la sécurité.
Ne les remplacer que par une pièce portant le numéro spécifié.

5-1. CABINET SECTION

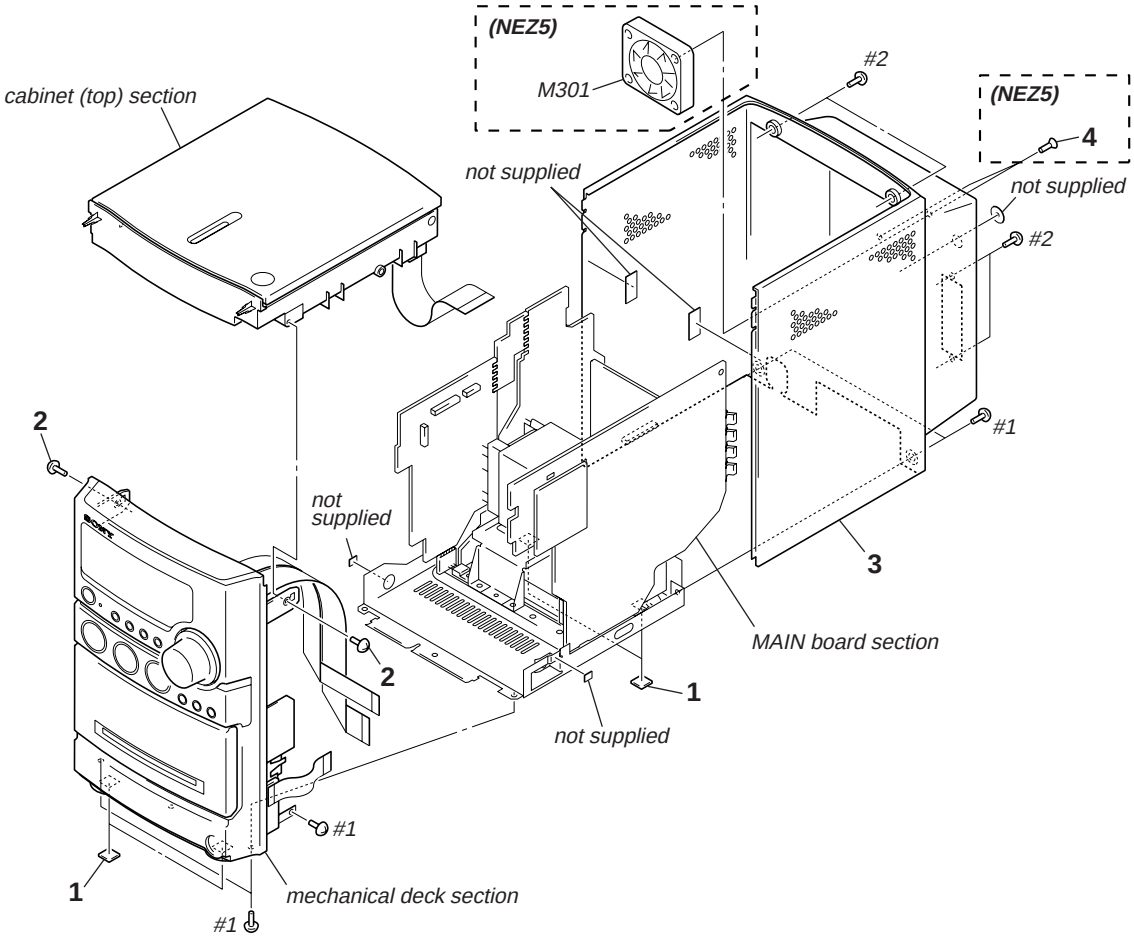

Ref. No.	Part No.	Description	Remark
1	4-247-752-01	FOOT, RUBBER	
2	4-951-620-01	SCREW (2.6X8), +BVTP	
3	2-581-397-02	CABINET (NEZ3: US)	
3	2-581-399-03	CABINET (NEZ3: AEP, UK, EE, RU)	
3	2-581-399-12	CABINET (NEZ3: CND)	
4	4-671-016-01	SCREW (FAN) (NEZ5)	
M301	1-787-103-11	FAN, DC (NEZ5)	
#1	7-685-646-79	SCREW +BVTP 3X8 TYPE2 N-S	
#2	7-685-647-79	SCREW +BVTP 3X10 TYPE2 N-S	

5-2. MECHANICAL DECK SECTION

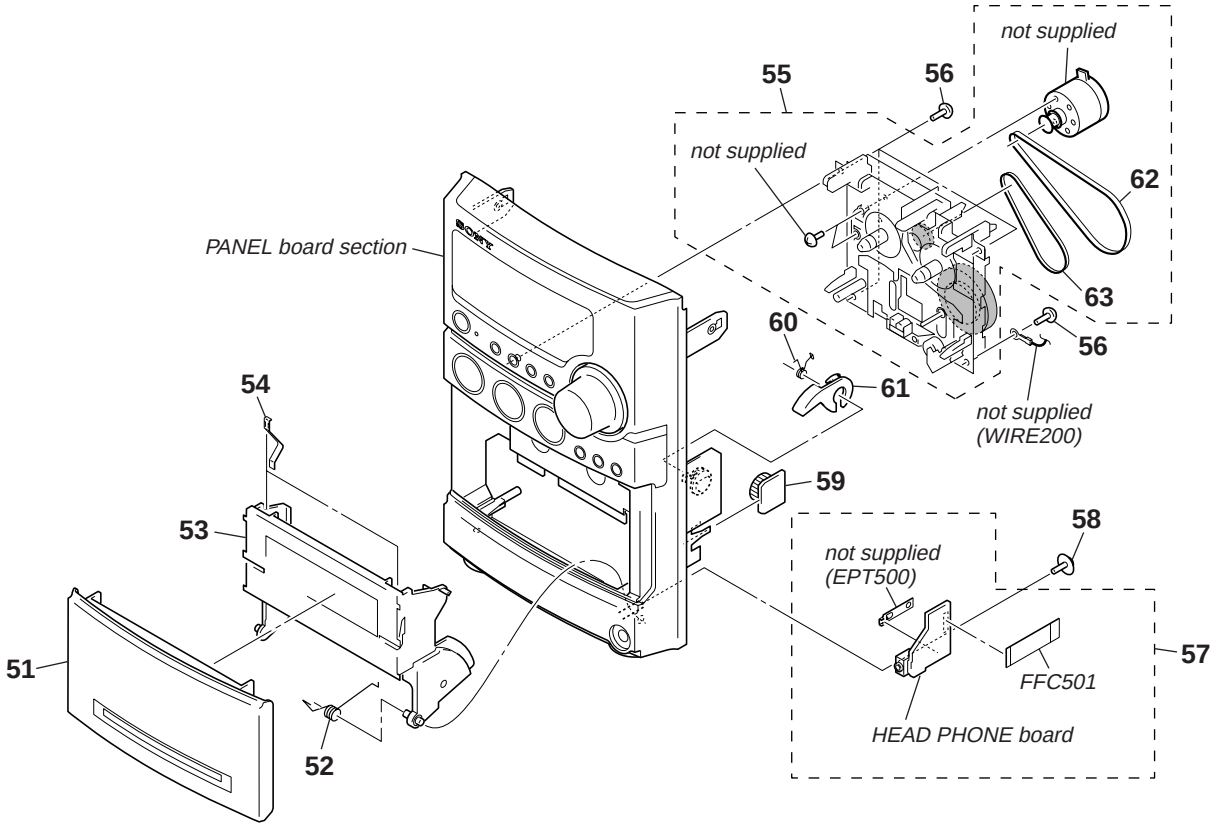

Ref. No.	Part No.	Description	Remark
51	X-2048-718-1	LID ASSY, CASSETTE	
52	4-245-034-01	SPRING (CASSETTE)	
53	2-581-395-01	HOLDER (CASSETTE)	
54	4-238-631-01	TAPE SPRING	
55	1-796-352-71	DECK, MECHANICAL (CMAL5Z231)	
56	4-951-620-01	SCREW (2.6X8), +BVTP	
57	A-1139-347-A	HEAD PHONE BOARD, COMPLETE	(NEZ3: US, CND)
57	A-1139-427-A	HEAD PHONE BOARD, COMPLETE (NEZ5)	
57	A-1142-959-A	HEAD PHONE BOARD, COMPLETE	(NEZ3: AEP, UK, EE, RU)
58	4-933-134-11	SCREW (+PTPWH M2.6X8)	
59	4-224-104-41	DAMPER	
60	4-231-841-01	SPRING (HEART CAM-B)	
61	4-231-825-01	CAM (B), HEART	
62	2-655-725-01	BELT (MAIN)	
63	2-655-726-01	BELT (MO), F/R	
FFC501	1-830-584-12	CABLE, FLEXIBLE FLAT (13 CORE)	

5-3. PANEL BOARD SECTION

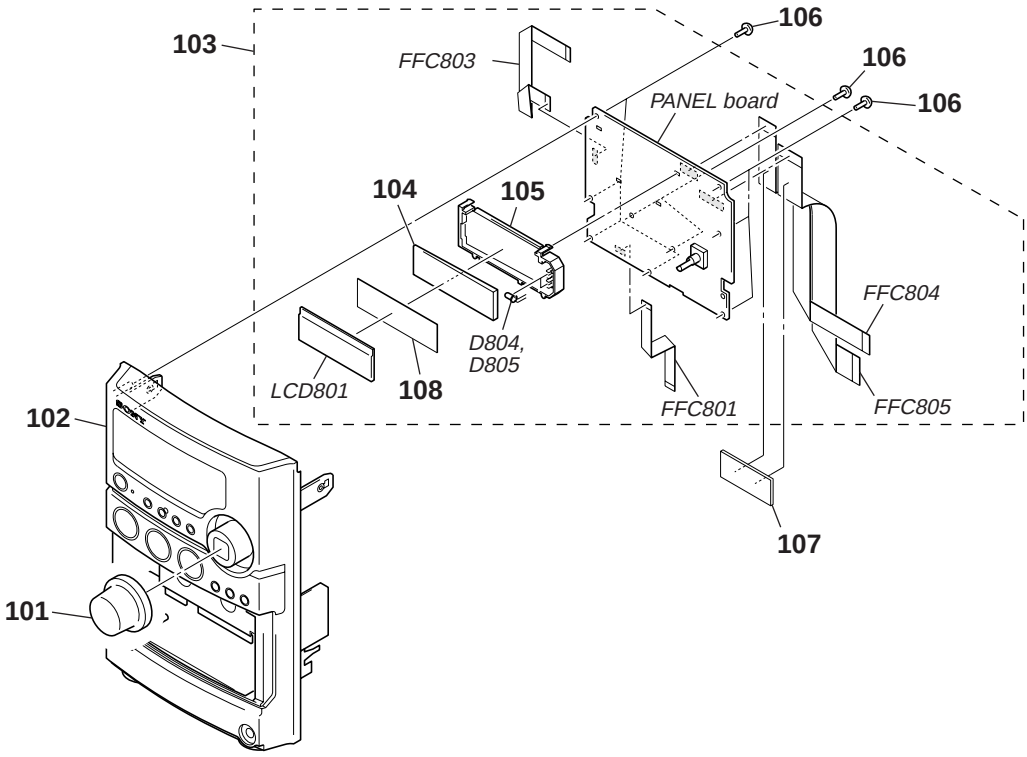

Ref. No.	Part No.	Description	Remark
101	2-581-385-02	KNOB (VOL) (NEZ3)	
101	2-581-385-11	KNOB (VOL) (NEZ5)	
102	X-2048-717-1	PANEL ASSY, FRONT (NEZ3: US)	
102	X-2048-755-1	PANEL ASSY, FRONT (NEZ3: AEP, UK, EE, RU)	
102	X-2050-120-1	PANEL ASSY, FRONT (NEZ5)	
102	X-2050-273-1	PANEL ASSY, FRONT (NEZ3: CND)	
103	A-1139-353-A	PANEL BOARD, COMPLETE (NEZ3: US, CND)	
103	A-1139-425-A	PANEL BOARD, COMPLETE (NEZ5)	
103	A-1142-952-A	PANEL BOARD, COMPLETE	(NEZ3: AEP, UK, EE, RU)
104	2-581-391-01	PLATE, LIGHT GUIDE	
105	2-581-390-01	HOLDER (LCD)	
106	4-951-620-01	SCREW (2.6X8), +BVTP	
107	2-591-582-01	PLATE (FRONT FFC), PROTECTION	
108	2-586-988-12	SHEET (LCD), DIFFUSION	

Ref. No.	Part No.	Description	Remark
D804	6-501-138-01	DIODE SELU2WA10C-LF62 (LCD BACK LIGHT)	(NEZ5)
D804	6-501-139-01	DIODE SELU2B10A-SLF62 (LCD BACK LIGHT)	(NEZ3)
D805	6-501-138-01	DIODE SELU2WA10C-LF62 (LCD BACK LIGHT)	(NEZ5)
D805	6-501-139-01	DIODE SELU2B10A-SLF62 (LCD BACK LIGHT)	(NEZ3)
FFC801	1-830-583-11	CABLE, FLEXIBLE FLAT (7 CORE)	
FFC803	1-830-579-11	CABLE, FLEXIBLE FLAT (9 CORE)	
FFC804	1-831-520-11	CABLE, FLEXIBLE FLAT (13 CORE) (NEZ3)	
FFC804	1-831-521-11	CABLE, FLEXIBLE FLAT (15 CORE) (NEZ5)	
FFC805	1-830-901-11	CABLE, FLEXIBLE FLAT (17 CORE)	
LCD801	1-805-783-11	DISPLAY PANEL, LIQUID CRYSTAL	

5-4. CABINET (TOP) SECTION

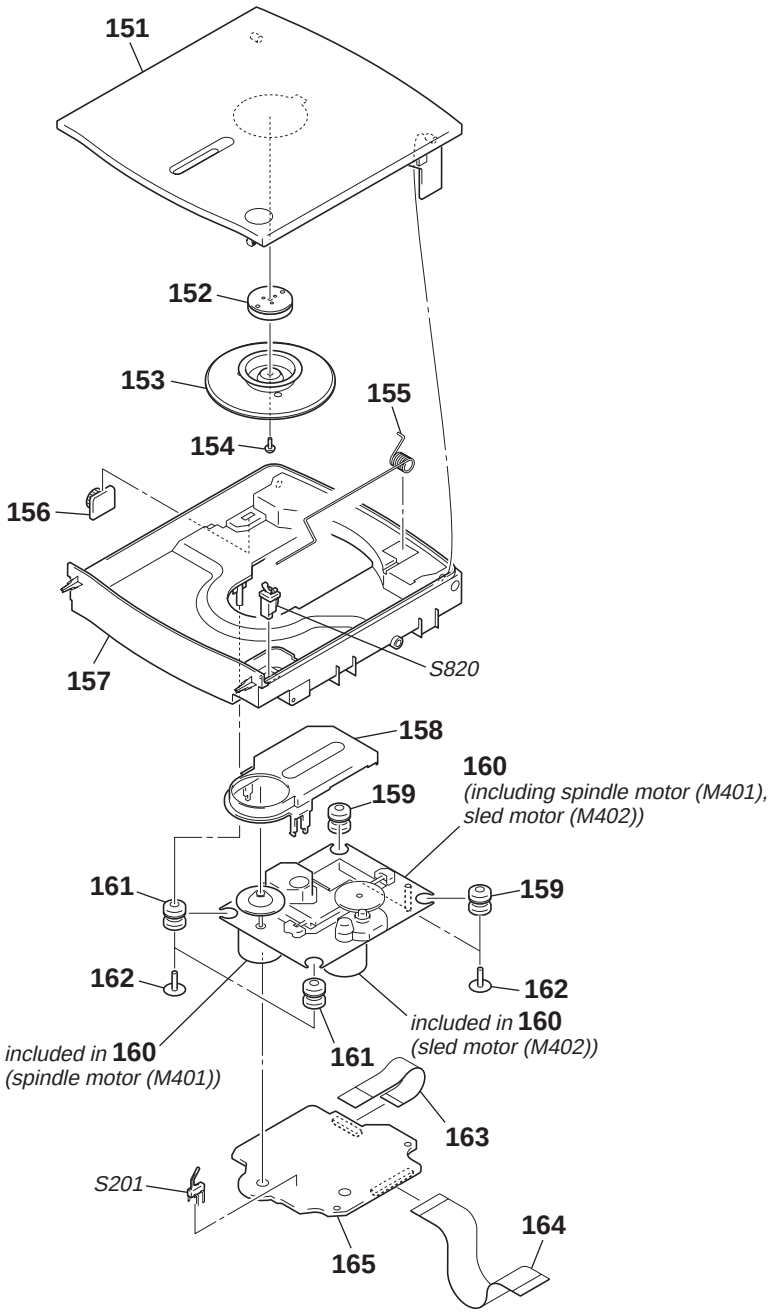

Ref. No.	Part No.	Description	Remark
151	X-2050-124-2	LID ASSY, CD	
152	1-452-899-11	MAGNET	
153	3-019-395-01	PLATE, CHUCKING	
154	3-253-143-01	SCREW (B2.6), (+) P TAPPING	
155	2-581-393-01	SPRING (CD)	
156	4-242-171-01	DAMPER 150 N	
157	2-581-388-01	CABINET (TOP) (NEZ3: US)	
157	2-581-388-11	CABINET (TOP) (NEZ3: CND, AEP, UK, EE, RU/NEZ5)	
158	4-247-493-01	COVER, CD	
159	3-931-379-21	RUBBER, VIBRATION PROOF (RED)	
⚠160	8-820-126-01	OPTICAL PICK-UP BLOCK (KSM-213CDP/C2NP) (Including spindle motor (M401), sled motor (M402))	
161	3-931-379-31	RUBBER, VIBRATION PROOF (GREEN)	
162	3-921-725-01	SCREW (2.6X10), +PWH	
163	1-827-992-11	WIRE (FLAT TYPE) (16 CORE)	
164	1-783-140-11	WIRE (FLAT TYPE) (23 CORE)	
165	A-1134-279-A	CD BOARD, COMPLETE	
S201	1-771-853-11	SWITCH, DETECTION (LIMIT)	
S820	1-692-960-21	SWITCH, PUSH (1 KEY) (CD LID OPEN/CLOSE DETECT)	

5-5. MAIN BOARD SECTION

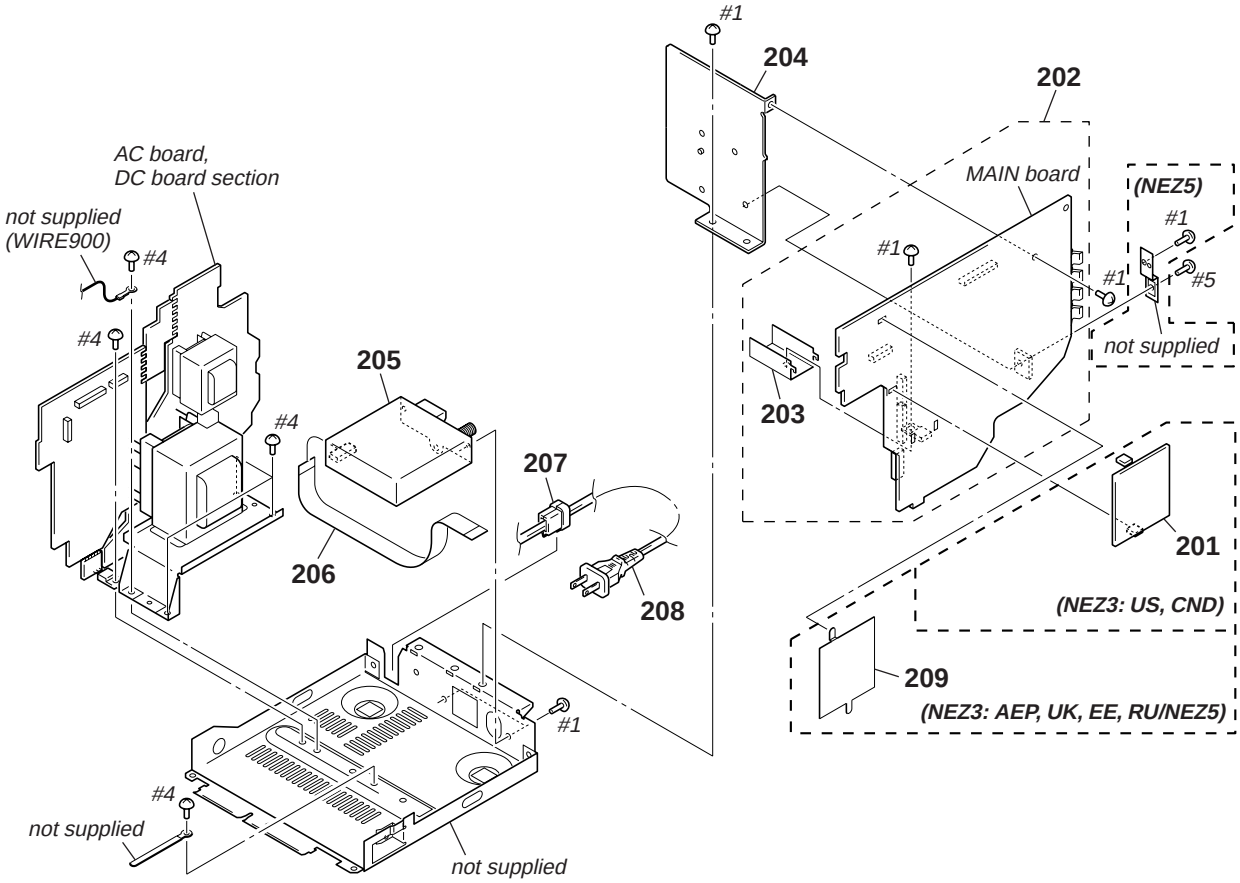

Ref. No.	Part No.	Description	Remark
201	A-1139-356-A	SHIELD BOARD, COMPLETE (NEZ3: US, CND)	
202	A-1139-350-A	MAIN BOARD, COMPLETE (NEZ3: US, CND)	
202	A-1139-421-A	MAIN BOARD, COMPLETE (NEZ5)	
202	A-1142-947-A	MAIN BOARD, COMPLETE	(NEZ3: AEP, UK, EE, RU)
203	2-586-961-01	HEAT SINK	
204	2-581-392-01	HEAT SINK (NEZ3: US, CND)	
204	2-581-392-11	HEAT SINK (NEZ3: AEP, UK, EE, RU)	
204	2-581-392-21	HEAT SINK (NEZ5)	
205	1-693-625-11	TUNER UNIT (FM/AM) (NEZ3: US, CND)	
205	1-693-626-11	TUNER UNIT (FM/AM) (NEZ5)	
205	1-693-629-11	TUNER UNIT (FM/AM) (NEZ3: AEP, UK, EE, RU)	

Ref. No.	Part No.	Description	Remark
206	1-769-946-11	WIRE (FLAT TYPE) (11 CORE) (NEZ3)	
206	1-773-011-11	WIRE (FLAT TYPE) (15 CORE) (NEZ5)	
207	3-703-244-00	BUSHING (2104), CORD	
⚠208	1-769-744-81	CORD, POWER (UK)	
⚠208	1-830-188-11	CORD, POWER (AEP, EE, RU)	
⚠208	1-830-190-11	CORD, POWER (US, CND)	
209	2-598-643-01	PLATE (M), SHIELD	(NEZ3: AEP, UK, EE, RU/NEZ5)
#1	7-685-646-79	SCREW +BVTP 3X8 TYPE2 N-S	
#4	7-685-871-01	SCREW +BVTT 3X6 (S)	
#5	7-685-647-79	SCREW +BVTP 3X10 TYPE2 N-S (NEZ3)	
#5	7-685-648-79	SCREW +BVTP 3X10 TYPE2 N-S (NEZ5)	

5-6. AC BOARD, DC BOARD SECTION

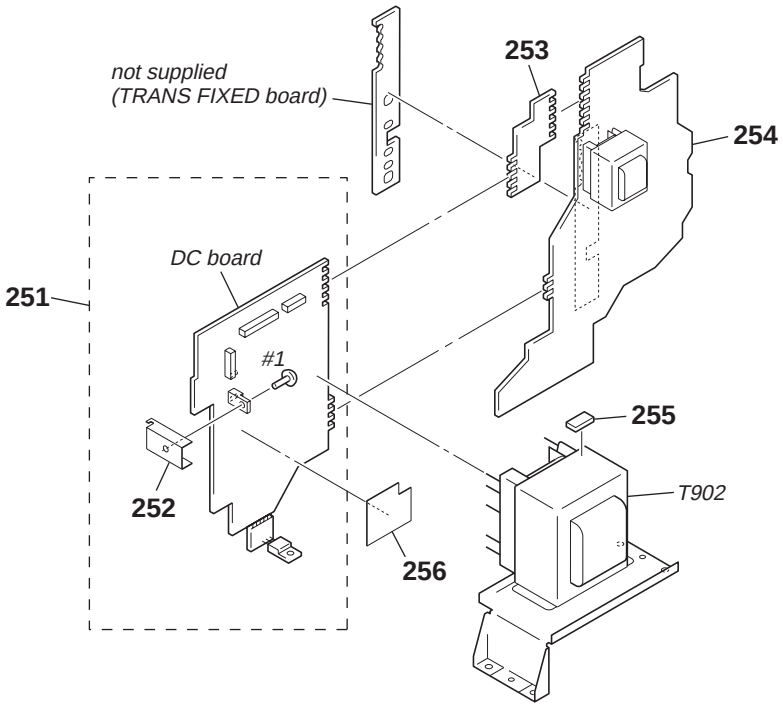

Ref. No.	Part No.	Description	Remark
251	A-1139-348-A	DC BOARD, COMPLETE	
252	2-586-961-11	HEAT SINK	
253	A-1139-357-A	CONNECT BOARD, COMPLETE (NEZ3: US, CND)	
253	A-1139-428-A	CONNECT BOARD, COMPLETE (NEZ5)	
253	A-1142-955-A	CONNECT BOARD, COMPLETE	(NEZ3: AEP, UK, EE, RU)
254	A-1139-349-A	AC BOARD, COMPLETE (NEZ3: US, CND)	
254	A-1139-398-A	AC BOARD, COMPLETE (NEZ5)	
254	A-1142-944-A	AC BOARD, COMPLETE	(NEZ3: AEP, UK, EE, RU)
255	2-594-960-11	SPACER (TRANSFORMER)	(NEZ3: AEP, UK, EE, RU/NEZ5)
255	2-594-960-21	SPACER (TRANSFORMER) (NEZ3: US, CND)	
256	2-633-205-01	INSULATED PLATE	
⚠T902	1-443-566-11	TRANSFORMER, POWER (NEZ5)	
⚠T902	1-443-573-11	TRANSFORMER, POWER	(NEZ3: AEP, UK, EE, RU)
⚠T902	1-443-626-11	TRANSFORMER, POWER (NEZ3: US, CND)	
#1	7-685-646-79	SCREW +BVTP 3X8 TYPE2 N-S	

AC CD

6. ELECTRICAL PARTS LIST

NOTE:

- Due to standardization, replacements in the parts list may be different from the parts specified in the diagrams or the components used on the set.
- -XX and -X mean standardized parts, so they may have some difference from the original one.
- RESISTORS
  All resistors are in ohms.
  METAL: Metal-film resistor.
  METAL OXIDE: Metal oxide-film resistor.
  F: nonflammable
- Abbreviation
  CND : Canadian model
  EE : East European model RU : Russian model
- Items marked "*" are not stocked since they are seldom required for routine service. Some delay should be anticipated when ordering these items.
- SEMICONDUCTORS
  In each case, u: µ, for example:
  uA... : µA... uPA... : µPA...
  uPB... : µPB... uPC... : µPC...
  uPD... : µPD...
- CAPACITORS
  uF: µF
- COILS
  uH: µH

The components identified by mark ⚠ or dotted line with mark ⚠ are critical for safety.
Replace only with part number specified.

Les composants identifiés par une marque ⚠ sont critiquens pour la sécurité.
Ne les remplacer que par une pièce portant le numéro spécifié.

When indicating parts by reference number, please include the board.

Ref. No.	Part No.	Description			Remark
	A-1139-349-A	AC BOARD, COMPLETE (NEZ3: US, CND)			
	A-1139-398-A	AC BOARD, COMPLETE (NEZ5)			
	A-1142-944-A	AC BOARD, COMPLETE (NEZ3: AEP, UK, EE, RU)			
		**********			
		< CAPACITOR >			
C914	1-126-964-11	ELECT	10uF	20%	50V
C921	1-126-767-11	ELECT	1000uF	20%	16V
⚠C931	1-113-924-11	CERAMIC	0.0047uF	20%	250V
		< CONNECTOR >			
* CN901	1-793-660-11	PIN, CONNECTOR (PC BOARD) 3P			
		< DIODE >			
D906	8-719-988-61	DIODE 1SS355TE-17			
D907	8-719-063-79	DIODE 1N4002B			
D908	8-719-063-79	DIODE 1N4002B			
D909	8-719-063-79	DIODE 1N4002B			
D910	8-719-063-79	DIODE 1N4002B			
D922	8-719-988-61	DIODE 1SS355TE-17			
D923	8-719-000-08	DIODE MC2838			
		< LINE FILTER >			
⚠LF901	1-402-663-11	TRANSFORMER, LINE FILTER (LFT)			
		< RESISTOR >			
⚠R903	1-219-512-22	METAL	2.2M	5%	1/2W F (NEZ3: US, CND)
R904	1-216-829-11	METAL CHIP	4.7K	5%	1/10W
R905	1-216-829-11	METAL CHIP	4.7K	5%	1/10W
R906	1-216-833-11	METAL CHIP	10K	5%	1/10W
R908	1-216-821-11	METAL CHIP	1K	5%	1/10W
R909	1-216-821-11	METAL CHIP	1K	5%	1/10W
		< RELAY >			
⚠RY901	1-755-276-11	RELAY, POWER			
		< TRANSFORMER >			
⚠T901	1-443-833-11	TRANSFORMER, POWER (NEZ3: US, CND)			
⚠T901	1-443-834-11	TRANSFORMER, POWER (NEZ3: AEP, UK, EE, RU/NEZ5)			
**********					

Ref. No.	Part No.	Description			Remark
	A-1134-279-A	CD BOARD, COMPLETE			
		**********			
		< CAPACITOR >			
C101	1-162-919-11	CERAMIC CHIP	22PF	5%	50V
C102	1-162-919-11	CERAMIC CHIP	22PF	5%	50V
C103	1-162-919-11	CERAMIC CHIP	22PF	5%	50V
C104	1-164-230-11	CERAMIC CHIP	220PF	5%	50V
C105	1-162-919-11	CERAMIC CHIP	22PF	5%	50V
C107	1-164-230-11	CERAMIC CHIP	220PF	5%	50V
C108	1-164-230-11	CERAMIC CHIP	220PF	5%	50V
C109	1-164-230-11	CERAMIC CHIP	220PF	5%	50V
C110	1-164-230-11	CERAMIC CHIP	220PF	5%	50V
C111	1-164-230-11	CERAMIC CHIP	220PF	5%	50V
C112	1-162-919-11	CERAMIC CHIP	22PF	5%	50V
C113	1-162-919-11	CERAMIC CHIP	22PF	5%	50V
C201	1-128-995-21	ELECT CHIP	100uF	20%	10V
C202	1-164-360-11	CERAMIC CHIP	0.1uF		16V
C203	1-128-995-21	ELECT CHIP	100uF	20%	10V
C204	1-164-360-11	CERAMIC CHIP	0.1uF		16V
C205	1-164-360-11	CERAMIC CHIP	0.1uF		16V
C206	1-164-360-11	CERAMIC CHIP	0.1uF		16V
C207	1-128-995-21	ELECT CHIP	100uF	20%	10V
C208	1-164-360-11	CERAMIC CHIP	0.1uF		16V
C210	1-164-360-11	CERAMIC CHIP	0.1uF		16V
C213	1-164-360-11	CERAMIC CHIP	0.1uF		16V
C214	1-164-360-11	CERAMIC CHIP	0.1uF		16V
C215	1-164-360-11	CERAMIC CHIP	0.1uF		16V
C217	1-164-360-11	CERAMIC CHIP	0.1uF		16V
C218	1-164-360-11	CERAMIC CHIP	0.1uF		16V
C219	1-164-360-11	CERAMIC CHIP	0.1uF		16V
C220	1-164-360-11	CERAMIC CHIP	0.1uF		16V
C221	1-164-360-11	CERAMIC CHIP	0.1uF		16V
C222	1-164-360-11	CERAMIC CHIP	0.1uF		16V
C223	1-164-360-11	CERAMIC CHIP	0.1uF		16V
C224	1-164-360-11	CERAMIC CHIP	0.1uF		16V
C226	1-165-908-11	CERAMIC CHIP	1uF	10%	10V
C227	1-165-908-11	CERAMIC CHIP	1uF	10%	10V
C230	1-162-927-11	CERAMIC CHIP	100PF	5%	50V
C232	1-164-360-11	CERAMIC CHIP	0.1uF		16V
C251	1-164-315-11	CERAMIC CHIP	470PF	5%	50V
C252	1-162-968-11	CERAMIC CHIP	0.0047uF	10%	50V
C253	1-164-315-11	CERAMIC CHIP	470PF	5%	50V
C254	1-162-968-11	CERAMIC CHIP	0.0047uF	10%	50V

CD CONNECT DC

Ref. No.	Part No.	Description			Remark
C256	1-107-826-11	CERAMIC CHIP	0.1uF	10%	16V
C257	1-107-826-11	CERAMIC CHIP	0.1uF	10%	16V
C258	1-164-230-11	CERAMIC CHIP	220PF	5%	50V
C260	1-117-863-11	CERAMIC CHIP	0.47uF	10%	6.3V
C261	1-162-970-11	CERAMIC CHIP	0.01uF	10%	25V
C264	1-162-964-11	CERAMIC CHIP	0.001uF	10%	50V
C265	1-107-826-11	CERAMIC CHIP	0.1uF	10%	16V
C266	1-162-915-11	CERAMIC CHIP	10PF	0.5PF	50V
C267	1-162-910-11	CERAMIC CHIP	5PF	0.25PF	50V
C268	1-162-915-11	CERAMIC CHIP	10PF	0.5PF	50V
C271	1-107-826-11	CERAMIC CHIP	0.1uF	10%	16V
C272	1-164-360-11	CERAMIC CHIP	0.1uF		16V
C273	1-164-315-11	CERAMIC CHIP	470PF	5%	50V
C274	1-107-826-11	CERAMIC CHIP	0.1uF	10%	16V
C275	1-162-910-11	CERAMIC CHIP	5PF	0.25PF	50V
C276	1-165-908-11	CERAMIC CHIP	1uF	10%	10V
C277	1-165-908-11	CERAMIC CHIP	1uF	10%	10V
C291	1-164-315-11	CERAMIC CHIP	470PF	5%	50V
C292	1-164-315-11	CERAMIC CHIP	470PF	5%	50V
C301	1-164-360-11	CERAMIC CHIP	0.1uF		16V
C303	1-137-710-11	CERAMIC CHIP	10uF	20%	6.3V
C304	1-165-908-11	CERAMIC CHIP	1uF	10%	10V
C321	1-162-964-11	CERAMIC CHIP	0.001uF	10%	50V
C322	1-165-908-11	CERAMIC CHIP	1uF	10%	10V
C323	1-128-995-21	ELECT CHIP	100uF	20%	10V
C401	1-128-394-11	ELECT CHIP	220uF	20%	10V
C404	1-164-360-11	CERAMIC CHIP	0.1uF		16V
C405	1-164-360-11	CERAMIC CHIP	0.1uF		16V
C406	1-164-360-11	CERAMIC CHIP	0.1uF		16V
C424	1-164-360-11	CERAMIC CHIP	0.1uF		16V
C451	1-165-176-11	CERAMIC CHIP	0.047uF	10%	16V
		< CONNECTOR >			
CN102	1-770-706-11	CONNECTOR, FFC/FPC 23P			
CN301	1-770-425-11	CONNECTOR, FFC/FPC 16P			
		< IC >			
IC201	8-753-246-30	IC CXD3014A-201R			
IC202	6-708-736-01	IC BD18KA5FP-E2			
IC402	6-705-808-01	IC BA5947FM-E2			
		< TRANSISTOR >			
Q321	6-551-120-01	TRANSISTOR	2SA2119K		
		< RESISTOR/FERRITE BEAD >			
R101	1-216-809-11	METAL CHIP	100	5%	1/10W
R102	1-216-809-11	METAL CHIP	100	5%	1/10W
R103	1-216-809-11	METAL CHIP	100	5%	1/10W
R104	1-216-809-11	METAL CHIP	100	5%	1/10W
R105	1-216-809-11	METAL CHIP	100	5%	1/10W
R107	1-216-809-11	METAL CHIP	100	5%	1/10W
R108	1-216-809-11	METAL CHIP	100	5%	1/10W
R109	1-216-809-11	METAL CHIP	100	5%	1/10W
R110	1-216-809-11	METAL CHIP	100	5%	1/10W
R111	1-216-809-11	METAL CHIP	100	5%	1/10W
R112	1-216-809-11	METAL CHIP	100	5%	1/10W

Ref. No.	Part No.	Description			Remark
R113	1-216-809-11	METAL CHIP	100	5%	1/10W
R201	1-216-295-00	SHORT CHIP	0		
R202	1-216-295-00	SHORT CHIP	0		
R203	1-500-445-21	FERRITE, EMI (SMD) (2012)			
R207	1-216-295-00	SHORT CHIP	0		
R250	1-216-857-11	METAL CHIP	1M	5%	1/10W
R252	1-216-833-11	METAL CHIP	10K	5%	1/10W
R253	1-216-821-11	METAL CHIP	1K	5%	1/10W
R254	1-216-833-11	METAL CHIP	10K	5%	1/10W
R255	1-216-821-11	METAL CHIP	1K	5%	1/10W
R256	1-216-837-11	METAL CHIP	22K	5%	1/10W
R257	1-216-845-11	METAL CHIP	100K	5%	1/10W
R258	1-216-849-11	METAL CHIP	220K	5%	1/10W
R260	1-216-864-11	SHORT CHIP	0		
R265	1-216-829-11	METAL CHIP	4.7K	5%	1/10W
R266	1-216-821-11	METAL CHIP	1K	5%	1/10W
R267	1-216-829-11	METAL CHIP	4.7K	5%	1/10W
R268	1-216-833-11	METAL CHIP	10K	5%	1/10W
R270	1-216-821-11	METAL CHIP	1K	5%	1/10W
R271	1-216-857-11	METAL CHIP	1M	5%	1/10W
R275	1-216-809-11	METAL CHIP	100	5%	1/10W
R276	1-216-841-11	METAL CHIP	47K	5%	1/10W
R277	1-216-809-11	METAL CHIP	100	5%	1/10W
R278	1-216-809-11	METAL CHIP	100	5%	1/10W
R280	1-216-864-11	SHORT CHIP	0		
R291	1-216-809-11	METAL CHIP	100	5%	1/10W
R292	1-216-809-11	METAL CHIP	100	5%	1/10W
R321	1-216-789-11	METAL CHIP	2.2	5%	1/10W
R322	1-216-789-11	METAL CHIP	2.2	5%	1/10W
R323	1-216-864-11	SHORT CHIP	0		
R324	1-216-845-11	METAL CHIP	100K	5%	1/10W
R401	1-216-295-00	SHORT CHIP	0		
R421	1-216-864-11	SHORT CHIP	0		
R423	1-216-833-11	METAL CHIP	10K	5%	1/10W
R451	1-216-837-11	METAL CHIP	22K	5%	1/10W
R452	1-216-833-11	METAL CHIP	10K	5%	1/10W
		< VIBRATOR >			
X201	1-795-101-21	VIBRATOR, CERAMIC			

****

	A-1139-357-A	CONNECT BOARD, COMPLETE (NEZ3: US, CND)
	A-1139-428-A	CONNECT BOARD, COMPLETE (NEZ5)
	A-1142-955-A	CONNECT BOARD, COMPLETE (NEZ3: AEP, UK, EE, RU)
		**********

****

	A-1139-348-A	DC BOARD, COMPLETE
		**********
	2-586-961-11	HEAT SINK
	7-685-646-79	SCREW +BVTP 3X8 TYPE2 N-S
		< CAPACITOR >

C336	1-126-965-11	ELECT	22uF	20%	50V
C350	1-126-964-11	ELECT	10uF	20%	50V
C901	1-136-497-81	FILM	0.1uF	5%	50V
C902	1-136-497-81	FILM	0.1uF	5%	50V

Ref. No.	Part No.	Description			Remark
C918	1-104-655-91	ELECT	470uF	20%	6.3V
C919	1-126-943-21	ELECT	2200uF	20%	25V
C920	1-126-933-11	ELECT	100uF	20%	16V
C922	1-126-934-11	ELECT	220uF	20%	16V
C923	1-164-156-11	CERAMIC CHIP	0.1uF		25V
C925	1-162-974-11	CERAMIC CHIP	0.01uF		50V
C930	1-164-156-11	CERAMIC CHIP	0.1uF		25V
		< CONNECTOR >			
CN900	1-568-828-11	CONNECTOR, FFC 9P			
CN902	1-819-134-11	PIN, CONNECTOR 6P			
CN903	1-819-132-11	PIN, CONNECTOR 4P			
		< DIODE >			
D322	8-719-000-07	DIODE MC2836			
D911	8-719-063-79	DIODE 1N4002B			
D912	8-719-063-79	DIODE 1N4002B			
D913	8-719-063-79	DIODE 1N4002B			
D914	8-719-063-79	DIODE 1N4002B			
D916	8-719-046-47	DIODE 1N5401TM			
D917	8-719-046-47	DIODE 1N5401TM			
D918	8-719-046-47	DIODE 1N5401TM			
D919	8-719-046-47	DIODE 1N5401TM			
D920	8-719-000-08	DIODE MC2838			
D926	8-719-063-79	DIODE 1N4002B			
D927	8-719-063-79	DIODE 1N4002B			
D928	8-719-063-79	DIODE 1N4002B			
D936	8-719-988-61	DIODE 1SS355TE-17			
		< IC >			
IC900	8-759-231-57	IC TA7810S			
IC901	6-702-771-01	IC TA78033LS			
IC903	6-703-546-01	IC TA7804LS			
		< TRANSISTOR >			
Q315	8-729-142-46	TRANSISTOR	2SC2001-LK		
Q333	8-729-027-43	TRANSISTOR	DTC114EKA-T146		
Q338	8-729-027-43	TRANSISTOR	DTC114EKA-T146		
		< RESISTOR >			
R901	1-216-841-11	METAL CHIP	47K	5%	1/10W
R902	1-216-841-11	METAL CHIP	47K	5%	1/10W
R907	1-216-841-11	METAL CHIP	47K	5%	1/10W
R911	1-216-841-11	METAL CHIP	47K	5%	1/10W
R912	1-216-841-11	METAL CHIP	47K	5%	1/10W
R913	1-216-841-11	METAL CHIP	47K	5%	1/10W
R914	1-216-829-11	METAL CHIP	4.7K	5%	1/10W
R915	1-216-837-11	METAL CHIP	22K	5%	1/10W
R916	1-216-841-11	METAL CHIP	47K	5%	1/10W
R919	1-216-841-11	METAL CHIP	47K	5%	1/10W

****

Ref. No.	Part No.	Description			Remark
	A-1139-347-A	HEAD PHONE BOARD, COMPLETE			(NEZ3: US, CND)
	A-1139-427-A	HEAD PHONE BOARD, COMPLETE (NEZ5)			
	A-1142-959-A	HEAD PHONE BOARD, COMPLETE			(NEZ3: AEP, UK, EE, RU)
		**********			
		< CAPACITOR >			
C520	1-162-974-11	CERAMIC CHIP	0.01uF		50V
C521	1-162-974-11	CERAMIC CHIP	0.01uF		50V
		< FLAT TYPE WIRE >			
FFC501	1-830-584-12	CABLE, FLEXIBLE FLAT (13 CORE)			
		< JACK >			
J500	1-793-829-11	JACK, HEADPHONE (PHONES)			
		< RESISTOR >			
R519	1-216-817-11	METAL CHIP	470	5%	1/10W
R520	1-216-817-11	METAL CHIP	470	5%	1/10W
R525	1-216-817-11	METAL CHIP	470	5%	1/10W
R526	1-216-817-11	METAL CHIP	470	5%	1/10W
R527	1-216-817-11	METAL CHIP	470	5%	1/10W
R528	1-216-817-11	METAL CHIP	470	5%	1/10W
R529	1-216-809-11	METAL CHIP	100	5%	1/10W (NEZ3: US, CND)
R529	1-216-813-11	METAL CHIP	220	5%	1/10W (NEZ3: AEP, UK, EE, RU)
R529	1-216-817-11	METAL CHIP	470	5%	1/10W (NEZ5)
R530	1-216-809-11	METAL CHIP	100	5%	1/10W (NEZ3: US, CND)
R530	1-216-813-11	METAL CHIP	220	5%	1/10W (NEZ3: AEP, UK, EE, RU)
R530	1-216-817-11	METAL CHIP	470	5%	1/10W (NEZ5)
R531	1-216-809-11	METAL CHIP	100	5%	1/10W (NEZ3: US, CND)
R531	1-216-813-11	METAL CHIP	220	5%	1/10W (NEZ3: AEP, UK, EE, RU)
R531	1-216-817-11	METAL CHIP	470	5%	1/10W (NEZ5)
R532	1-216-809-11	METAL CHIP	100	5%	1/10W (NEZ3: US, CND)
R532	1-216-813-11	METAL CHIP	220	5%	1/10W (NEZ3: AEP, UK, EE, RU)
R532	1-216-817-11	METAL CHIP	470	5%	1/10W (NEZ5)
R533	1-216-809-11	METAL CHIP	100	5%	1/10W (NEZ3: US, CND)
R533	1-216-813-11	METAL CHIP	220	5%	1/10W (NEZ3: AEP, UK, EE, RU)
R533	1-216-817-11	METAL CHIP	470	5%	1/10W (NEZ5)
R534	1-216-809-11	METAL CHIP	100	5%	1/10W (NEZ3: US, CND)
R534	1-216-813-11	METAL CHIP	220	5%	1/10W (NEZ3: AEP, UK, EE, RU)
R534	1-216-817-11	METAL CHIP	470	5%	1/10W (NEZ5)

****

MAIN

Ref. No.	Part No.	Description			Remark
	A-1139-350-A	MAIN BOARD, COMPLETE (NEZ3: US, CND)			
	A-1139-421-A	MAIN BOARD, COMPLETE (NEZ5)			
	A-1142-947-A	MAIN BOARD, COMPLETE (NEZ3: AEP, UK, EE, RU)			
		**********			
	2-586-961-01	HEAT SINK			
	2-598-643-01	PLATE (M), SHIELD (NEZ3: AEP, UK, EE, RU/NEZ5)			
	7-685-646-79	SCREW +BVTP 3X8 TYPE2 N-S			
		< CAPACITOR/JUMPER RESISTOR >			
C101	1-162-964-11	CERAMIC CHIP	0.001uF	10%	50V
C102	1-162-966-11	CERAMIC CHIP	0.0022uF	10%	50V
C103	1-162-927-11	CERAMIC CHIP	100PF	5%	50V
C104	1-104-665-11	ELECT	100uF	20%	25V
C106	1-164-227-11	CERAMIC CHIP	0.022uF	10%	25V
C107	1-126-961-11	ELECT	2.2uF	20%	50V
C108	1-162-968-11	CERAMIC CHIP	0.0047uF	10%	50V
C111	1-162-964-11	CERAMIC CHIP	0.001uF	10%	50V
C113	1-126-957-11	ELECT	0.22uF	20%	50V
C114	1-126-959-11	ELECT	0.47uF	20%	50V
C115	1-126-964-11	ELECT	10uF	20%	50V
C116	1-162-962-11	CERAMIC CHIP	470PF	10%	50V
C117	1-162-964-11	CERAMIC CHIP	0.001uF	10%	50V
C118	1-165-176-11	CERAMIC CHIP	0.047uF	10%	16V
C119	1-162-974-11	CERAMIC CHIP	0.01uF		50V
C120	1-162-960-11	CERAMIC CHIP	220PF	10%	50V
C121	1-216-864-11	SHORT CHIP	0		
C126	1-162-960-11	CERAMIC CHIP	220PF	10%	50V
C127	1-162-962-11	CERAMIC CHIP	470PF	10%	50V
C133	1-130-491-00	MYLAR	0.047uF	5%	50V
C135	1-126-964-11	ELECT	10uF	20%	50V
C136	1-126-964-11	ELECT	10uF	20%	50V
C138	1-126-965-11	ELECT	22uF	20%	50V
C139	1-162-962-11	CERAMIC CHIP	470PF	10%	50V
C140	1-162-960-11	CERAMIC CHIP	220PF	10%	50V
C201	1-162-964-11	CERAMIC CHIP	0.001uF	10%	50V
C202	1-162-966-11	CERAMIC CHIP	0.0022uF	10%	50V
C203	1-162-927-11	CERAMIC CHIP	100PF	5%	50V
C204	1-104-665-11	ELECT	100uF	20%	25V
C206	1-164-227-11	CERAMIC CHIP	0.022uF	10%	25V
C207	1-126-961-11	ELECT	2.2uF	20%	50V
C208	1-162-968-11	CERAMIC CHIP	0.0047uF	10%	50V
C211	1-162-964-11	CERAMIC CHIP	0.001uF	10%	50V
C213	1-126-957-11	ELECT	0.22uF	20%	50V
C214	1-126-959-11	ELECT	0.47uF	20%	50V
C215	1-126-964-11	ELECT	10uF	20%	50V
C216	1-162-962-11	CERAMIC CHIP	470PF	10%	50V
C217	1-162-964-11	CERAMIC CHIP	0.001uF	10%	50V
C218	1-165-176-11	CERAMIC CHIP	0.047uF	10%	16V
C219	1-162-974-11	CERAMIC CHIP	0.01uF		50V
C220	1-162-960-11	CERAMIC CHIP	220PF	10%	50V
C221	1-216-864-11	SHORT CHIP	0		
C226	1-162-960-11	CERAMIC CHIP	220PF	10%	50V
C227	1-162-962-11	CERAMIC CHIP	470PF	10%	50V
C233	1-130-491-00	MYLAR	0.047uF	5%	50V
C235	1-126-964-11	ELECT	10uF	20%	50V
C236	1-126-964-11	ELECT	10uF	20%	50V
C238	1-126-965-11	ELECT	22uF	20%	50V
C239	1-162-962-11	CERAMIC CHIP	470PF	10%	50V
C240	1-162-960-11	CERAMIC CHIP	220PF	10%	50V
C301	1-162-915-11	CERAMIC CHIP	10PF	0.5PF	50V
C302	1-126-934-11	ELECT	220uF	20%	16V
C303	1-130-479-00	MYLAR	0.0047uF	5%	50V
C304	1-130-479-00	MYLAR	0.0047uF	5%	50V
C305	1-126-934-11	ELECT	220uF	20%	16V
C306	1-162-974-11	CERAMIC CHIP	0.01uF		50V
C309	1-126-926-11	ELECT	1000uF	20%	10V
C310	1-162-927-11	CERAMIC CHIP	100PF	5%	50V
C311	1-162-927-11	CERAMIC CHIP	100PF	5%	50V
C312	1-126-963-11	ELECT	4.7uF	20%	50V
C313	1-126-933-11	ELECT	100uF	20%	16V
C314	1-130-483-00	MYLAR	0.01uF	5%	50V
C315	1-162-927-11	CERAMIC CHIP	100PF	5%	50V
C316	1-162-927-11	CERAMIC CHIP	100PF	5%	50V
C317	1-162-919-11	CERAMIC CHIP	22PF	5%	50V
C318	1-162-927-11	CERAMIC CHIP	100PF	5%	50V
C319	1-162-927-11	CERAMIC CHIP	100PF	5%	50V
C320	1-107-826-11	CERAMIC CHIP	0.1uF	10%	16V
C321	1-162-927-11	CERAMIC CHIP	100PF	5%	50V
C322	1-162-927-11	CERAMIC CHIP	100PF	5%	50V
C324	1-126-963-11	ELECT	4.7uF	20%	50V (NEZ5)
C325	1-162-927-11	CERAMIC CHIP	100PF	5%	50V
C326	1-162-927-11	CERAMIC CHIP	100PF	5%	50V
C327	1-162-927-11	CERAMIC CHIP	100PF	5%	50V
C328	1-107-826-11	CERAMIC CHIP	0.1uF	10%	16V
C330	1-162-966-11	CERAMIC CHIP	0.0022uF	10%	50V
C331	1-115-467-11	CERAMIC CHIP	0.22uF	10%	50V
C332	1-162-964-11	CERAMIC CHIP	0.001uF	10%	50V
C335	1-126-933-11	ELECT	100uF	20%	16V
C351	1-104-665-11	ELECT	100uF	20%	25V
C352	1-126-953-11	ELECT	2200uF	20%	35V
C353	1-126-953-11	ELECT	2200uF	20%	35V
C354	1-126-947-11	ELECT	47uF	20%	35V
C355	1-130-487-00	MYLAR	0.022uF	5%	50V
C356	1-130-471-00	MYLAR	0.001uF	5%	50V
C358	1-130-483-00	MYLAR	0.01uF	5%	50V
C362	1-126-964-11	ELECT	10uF	20%	50V
C363	1-126-964-11	ELECT	10uF	20%	50V
C364	1-126-964-11	ELECT	10uF	20%	50V
C366	1-162-960-11	CERAMIC CHIP	220PF	10%	50V
C371	1-162-964-11	CERAMIC CHIP	0.001uF	10%	50V
C501	1-162-927-11	CERAMIC CHIP	100PF	5%	50V
C502	1-162-962-11	CERAMIC CHIP	470PF	10%	50V
C503	1-126-947-11	ELECT	47uF	20%	35V
C504	1-162-962-11	CERAMIC CHIP	470PF	10%	50V
C505	1-162-927-11	CERAMIC CHIP	100PF	5%	50V
C506	1-126-947-11	ELECT	47uF	20%	35V
C507	1-162-964-11	CERAMIC CHIP	0.001uF	10%	50V
C508	1-162-964-11	CERAMIC CHIP	0.001uF	10%	50V
C509	1-162-995-11	CERAMIC CHIP	0.022uF		50V
C510	1-162-964-11	CERAMIC CHIP	0.001uF	10%	50V
C511	1-126-957-11	ELECT	0.22uF	20%	50V
C512	1-136-169-00	FILM	0.22uF	5%	50V

Ref. No.	Part No.	Description			Remark
C513	1-126-957-11	ELECT	0.22uF	20%	50V
C514	1-136-169-00	FILM	0.22uF	5%	50V
C516	1-126-933-11	ELECT	100uF	20%	16V
C523	1-162-962-11	CERAMIC CHIP	470PF	10%	50V
C524	1-162-962-11	CERAMIC CHIP	470PF	10%	50V
		< CONNECTOR >			
* CN301	1-815-448-11	PIN, CONNECTOR (PWB) 7P			
CN313	1-819-131-11	PIN, CONNECTOR 3P (NEZ5)			
CN317	1-779-291-11	CONNECTOR, FFC (LIF (NON-ZIF)) 23P			
CN319	1-568-830-11	CONNECTOR, FFC 11P (NEZ3)			
CN319	1-784-776-11	CONNECTOR, FFC 15P (NEZ5)			
CN320	1-784-774-11	CONNECTOR, FFC 13P (NEZ3)			
CN320	1-784-776-11	CONNECTOR, FFC 15P (NEZ5)			
CN321	1-784-778-11	CONNECTOR, FFC 17P			
CN500	1-784-735-11	CONNECTOR, FFC 13P			
		< DIODE >			
D303	8-719-063-79	DIODE 1N4002B			
D304	8-719-063-79	DIODE 1N4002B			
D307	8-719-000-07	DIODE MC2836			
D313	8-719-000-08	DIODE MC2838 (NEZ5)			
D319	6-500-848-01	DIODE MC2840-T112-1			
D320	6-500-848-01	DIODE MC2840-T112-1			
D321	8-719-988-61	DIODE 1SS355TE-17			
D323	8-719-083-60	DIODE UDZSTE-174.7B			
D324	8-719-083-60	DIODE UDZSTE-174.7B			
D325	6-500-848-01	DIODE MC2840-T112-1			
D327	6-500-848-01	DIODE MC2840-T112-1			
		< JUMPER RESISTOR >			
FB304	1-216-864-11	SHORT CHIP	0		
FB305	1-216-864-11	SHORT CHIP	0		
FB306	1-216-864-11	SHORT CHIP	0		
FB317	1-216-864-11	SHORT CHIP	0		
		< IC >			
IC302	6-702-895-01	IC BD3881FV			
IC303	8-759-701-59	IC NJM78M09FA			
IC501	8-759-333-24	IC LM1876TF			
		< JACK >			
J302	1-780-275-11	TERMINAL BOARD, PUSH (4P) (SPEAKER)			
J321	1-815-629-11	JACK (AUDIO IN)			
		< JUMPER RESISTOR >			
JR152	1-216-864-11	SHORT CHIP	0		
		< COIL >			
L101	1-422-009-13	COIL, AIR-CORE			
L201	1-422-009-13	COIL, AIR-CORE			
		< TRANSISTOR >			
Q316	8-729-120-28	TRANSISTOR	2SC1623-L5L6 (NEZ5)		
Q317	8-729-040-76	TRANSISTOR	KTA1273-Y-AT (NEZ5)		
Q326	8-729-120-28	TRANSISTOR	2SC1623-L5L6		
Q327	8-729-120-28	TRANSISTOR	2SC1623-L5L6		

Ref. No.	Part No.	Description			Remark
Q328	8-729-120-28	TRANSISTOR	2SC1623-L5L6		
Q329	8-729-120-28	TRANSISTOR	2SC1623-L5L6		
Q332	8-729-600-22	TRANSISTOR	2SA1235-F		
Q334	8-729-120-28	TRANSISTOR	2SC1623-L5L6		
Q335	8-729-120-28	TRANSISTOR	2SC1623-L5L6		
Q342	8-729-600-22	TRANSISTOR	2SA1235-F		
Q343	8-729-120-28	TRANSISTOR	2SC1623-L5L6		
Q344	8-729-142-46	TRANSISTOR	2SC2001-LK		
Q347	8-729-037-03	TRANSISTOR	KTA1266GR-AT		
Q348	8-729-027-43	TRANSISTOR	DTC114EKA-T146		
		< RESISTOR >			
R100	1-216-833-11	METAL CHIP	10K	5%	1/10W
R101	1-216-841-11	METAL CHIP	47K	5%	1/10W
R102	1-216-841-11	METAL CHIP	47K	5%	1/10W
R103	1-216-817-11	METAL CHIP	470	5%	1/10W
R104	1-216-805-11	METAL CHIP	47	5%	1/10W
R105	1-216-849-11	METAL CHIP	220K	5%	1/10W
R106	1-216-829-11	METAL CHIP	4.7K	5%	1/10W
R107	1-216-845-11	METAL CHIP	100K	5%	1/10W
R108	1-216-833-11	METAL CHIP	10K	5%	1/10W
R109	1-216-829-11	METAL CHIP	4.7K	5%	1/10W
R110	1-216-821-11	METAL CHIP	1K	5%	1/10W
R111	1-216-837-11	METAL CHIP	22K	5%	1/10W
R112	1-216-837-11	METAL CHIP	22K	5%	1/10W
R114	1-216-829-11	METAL CHIP	4.7K	5%	1/10W
R116	1-216-841-11	METAL CHIP	47K	5%	1/10W
R117	1-216-825-11	METAL CHIP	2.2K	5%	1/10W
R118	1-216-833-11	METAL CHIP	10K	5%	1/10W
R119	1-216-833-11	METAL CHIP	10K	5%	1/10W
R120	1-216-833-11	METAL CHIP	10K	5%	1/10W
R121	1-216-825-11	METAL CHIP	2.2K	5%	1/10W
R122	1-216-853-11	METAL CHIP	470K	5%	1/10W
R123	1-216-825-11	METAL CHIP	2.2K	5%	1/10W
R124	1-216-837-11	METAL CHIP	22K	5%	1/10W
R125	1-216-837-11	METAL CHIP	22K	5%	1/10W
R126	1-216-837-11	METAL CHIP	22K	5%	1/10W
R128	1-216-821-11	METAL CHIP	1K	5%	1/10W
R129	1-216-793-11	METAL CHIP	4.7	5%	1/10W
R130	1-216-793-11	METAL CHIP	4.7	5%	1/10W
R131	1-216-821-11	METAL CHIP	1K	5%	1/10W
R132	1-216-821-11	METAL CHIP	1K	5%	1/10W
R133	1-216-864-11	SHORT CHIP	0		
R134	1-216-864-11	SHORT CHIP	0		
R135	1-216-845-11	METAL CHIP	100K	5%	1/10W
R136	1-216-833-11	METAL CHIP	10K	5%	1/10W
R137	1-216-829-11	METAL CHIP	4.7K	5%	1/10W
R138	1-216-825-11	METAL CHIP	2.2K	5%	1/10W
R139	1-216-837-11	METAL CHIP	22K	5%	1/10W
R143	1-216-833-11	METAL CHIP	10K	5%	1/10W
R145	1-216-864-11	SHORT CHIP	0		
R147	1-216-837-11	METAL CHIP	22K	5%	1/10W
R148	1-216-825-11	METAL CHIP	2.2K	5%	1/10W
R149	1-216-833-11	METAL CHIP	10K	5%	1/10W
R200	1-216-833-11	METAL CHIP	10K	5%	1/10W
R201	1-216-841-11	METAL CHIP	47K	5%	1/10W
R202	1-216-841-11	METAL CHIP	47K	5%	1/10W

MAIN

Ref. No.	Part No.	Description			Remark
R203	1-216-817-11	METAL CHIP	470	5%	1/10W
R204	1-216-805-11	METAL CHIP	47	5%	1/10W
R205	1-216-849-11	METAL CHIP	220K	5%	1/10W
R206	1-216-829-11	METAL CHIP	4.7K	5%	1/10W
R207	1-216-845-11	METAL CHIP	100K	5%	1/10W
R208	1-216-833-11	METAL CHIP	10K	5%	1/10W
R209	1-216-829-11	METAL CHIP	4.7K	5%	1/10W
R210	1-216-821-11	METAL CHIP	1K	5%	1/10W
R211	1-216-837-11	METAL CHIP	22K	5%	1/10W
R212	1-216-837-11	METAL CHIP	22K	5%	1/10W
R214	1-216-829-11	METAL CHIP	4.7K	5%	1/10W
R216	1-216-841-11	METAL CHIP	47K	5%	1/10W
R217	1-216-825-11	METAL CHIP	2.2K	5%	1/10W
R218	1-216-833-11	METAL CHIP	10K	5%	1/10W
R219	1-216-833-11	METAL CHIP	10K	5%	1/10W
R220	1-216-833-11	METAL CHIP	10K	5%	1/10W
R221	1-216-825-11	METAL CHIP	2.2K	5%	1/10W
R222	1-216-853-11	METAL CHIP	470K	5%	1/10W
R223	1-216-825-11	METAL CHIP	2.2K	5%	1/10W
R224	1-216-837-11	METAL CHIP	22K	5%	1/10W
R225	1-216-837-11	METAL CHIP	22K	5%	1/10W
R226	1-216-837-11	METAL CHIP	22K	5%	1/10W
R228	1-216-821-11	METAL CHIP	1K	5%	1/10W
R229	1-216-793-11	METAL CHIP	4.7	5%	1/10W
R230	1-216-793-11	METAL CHIP	4.7	5%	1/10W
R231	1-216-821-11	METAL CHIP	1K	5%	1/10W
R232	1-216-821-11	METAL CHIP	1K	5%	1/10W
R233	1-216-864-11	SHORT CHIP	0		
R234	1-216-864-11	SHORT CHIP	0		
R235	1-216-845-11	METAL CHIP	100K	5%	1/10W
R236	1-216-833-11	METAL CHIP	10K	5%	1/10W
R237	1-216-829-11	METAL CHIP	4.7K	5%	1/10W
R238	1-216-825-11	METAL CHIP	2.2K	5%	1/10W
R239	1-216-837-11	METAL CHIP	22K	5%	1/10W
R243	1-216-833-11	METAL CHIP	10K	5%	1/10W
R245	1-216-864-11	SHORT CHIP	0		
R247	1-216-837-11	METAL CHIP	22K	5%	1/10W
R248	1-216-825-11	METAL CHIP	2.2K	5%	1/10W
R249	1-216-833-11	METAL CHIP	10K	5%	1/10W
R301	1-216-837-11	METAL CHIP	22K	5%	1/10W
R302	1-216-845-11	METAL CHIP	100K	5%	1/10W
R303	1-216-833-11	METAL CHIP	10K	5%	1/10W
R304	1-216-829-11	METAL CHIP	4.7K	5%	1/10W
R305	1-216-825-11	METAL CHIP	2.2K	5%	1/10W
R306	1-216-825-11	METAL CHIP	2.2K	5%	1/10W
R307	1-216-821-11	METAL CHIP	1K	5%	1/10W
R308	1-216-821-11	METAL CHIP	1K	5%	1/10W
R309	1-216-821-11	METAL CHIP	1K	5%	1/10W
R310	1-216-829-11	METAL CHIP	4.7K	5%	1/10W
R311	1-216-793-11	METAL CHIP	4.7	5%	1/10W
R312	1-216-793-11	METAL CHIP	4.7	5%	1/10W
R313	1-216-825-11	METAL CHIP	2.2K	5%	1/10W
R314	1-216-833-11	METAL CHIP	10K	5%	1/10W
R315	1-216-833-11	METAL CHIP	10K	5%	1/10W
R316	1-216-833-11	METAL CHIP	10K	5%	1/10W
R317	1-216-833-11	METAL CHIP	10K	5%	1/10W
R318	1-216-825-11	METAL CHIP	2.2K	5%	1/10W (NEZ5)
R319	1-216-837-11	METAL CHIP	22K	5%	1/10W
R328	1-216-833-11	METAL CHIP	10K	5%	1/10W (NEZ5)
R329	1-216-845-11	METAL CHIP	100K	5%	1/10W (NEZ5)
R330	1-216-841-11	METAL CHIP	47K	5%	1/10W (NEZ5)
R331	1-216-841-11	METAL CHIP	47K	5%	1/10W (NEZ5)
R358	1-216-841-11	METAL CHIP	47K	5%	1/10W
R362	1-216-837-11	METAL CHIP	22K	5%	1/10W
R366	1-216-837-11	METAL CHIP	22K	5%	1/10W
R367	1-216-825-11	METAL CHIP	2.2K	5%	1/10W
R368	1-216-833-11	METAL CHIP	10K	5%	1/10W
R369	1-216-833-11	METAL CHIP	10K	5%	1/10W
R370	1-216-833-11	METAL CHIP	10K	5%	1/10W
R371	1-216-833-11	METAL CHIP	10K	5%	1/10W
R376	1-216-845-11	METAL CHIP	100K	5%	1/10W
R377	1-216-817-11	METAL CHIP	470	5%	1/10W
R378	1-216-817-11	METAL CHIP	470	5%	1/10W
R379	1-216-817-11	METAL CHIP	470	5%	1/10W
R380	1-216-817-11	METAL CHIP	470	5%	1/10W
R381	1-216-817-11	METAL CHIP	470	5%	1/10W
R382	1-216-817-11	METAL CHIP	470	5%	1/10W
R383	1-216-813-11	METAL CHIP	220	5%	1/10W
R384	1-216-813-11	METAL CHIP	220	5%	1/10W
R385	1-260-095-11	CARBON	470	5%	1/2W (NEZ3: US, CND)
R385	1-260-328-11	CARBON	1K	5%	1/2W (NEZ3: AEP, UK, EE, RU/NEZ5)
R386	1-260-087-11	CARBON	100	5%	1/2W (NEZ3: AEP, UK, EE, RU)
R386	1-260-095-11	CARBON	470	5%	1/2W (NEZ3: US, CND/NEZ5)
R387	1-216-833-11	METAL CHIP	10K	5%	1/10W
R388	1-216-833-11	METAL CHIP	10K	5%	1/10W
R389	1-216-833-11	METAL CHIP	10K	5%	1/10W
R390	1-216-845-11	METAL CHIP	100K	5%	1/10W
R501	1-216-821-11	METAL CHIP	1K	5%	1/10W
R502	1-216-841-11	METAL CHIP	47K	5%	1/10W
R503	1-216-817-11	METAL CHIP	470	5%	1/10W
R504	1-216-841-11	METAL CHIP	47K	5%	1/10W
R505	1-216-841-11	METAL CHIP	47K	5%	1/10W
R506	1-216-821-11	METAL CHIP	1K	5%	1/10W
R507	1-216-833-11	METAL CHIP	10K	5%	1/10W
R508	1-216-817-11	METAL CHIP	470	5%	1/10W
R509	1-216-841-11	METAL CHIP	47K	5%	1/10W
R511	1-216-837-11	METAL CHIP	22K	5%	1/10W
R512	1-216-837-11	METAL CHIP	22K	5%	1/10W
R514	1-216-833-11	METAL CHIP	10K	5%	1/10W
⚠R515	1-216-373-81	METAL OXIDE	2.2	5%	2W F
⚠R516	1-216-373-81	METAL OXIDE	2.2	5%	2W F
R517	1-216-841-11	METAL CHIP	47K	5%	1/10W
R518	1-216-841-11	METAL CHIP	47K	5%	1/10W
R521	1-216-833-11	METAL CHIP	10K	5%	1/10W
R523	1-216-809-11	METAL CHIP	100	5%	1/10W (NEZ3: AEP, UK, EE, RU)
R523	1-216-813-11	METAL CHIP	220	5%	1/10W (NEZ3: US, CND)

Ref. No.	Part No.	Description			Remark
R523	1-216-864-11	SHORT CHIP	0 (NEZ5)		
R524	1-216-809-11	METAL CHIP	100	5%	1/10W (NEZ3: AEP, UK, EE, RU)
R524	1-216-813-11	METAL CHIP	220	5%	1/10W (NEZ3: US, CND)
R524	1-216-864-11	SHORT CHIP	0 (NEZ5)		
		< TRANSFORMER >			
T301	1-443-760-11	TRANSFORMER, BIAS OSCILLATION			
**********					
	A-1139-353-A	PANEL BOARD, COMPLETE (NEZ3: US, CND)			
	A-1139-425-A	PANEL BOARD, COMPLETE (NEZ5)			
	A-1142-952-A	PANEL BOARD, COMPLETE (NEZ3: AEP, UK, EE, RU)			
		**********			
	2-581-390-01	HOLDER (LCD)			
	2-581-391-01	PLATE, LIGHT GUIDE			
	2-586-988-11	SHEET (LCD), DIFFUSION			
		< CAPACITOR >			
C701	1-107-726-91	CERAMIC CHIP	0.01uF	10%	16V (NEZ5)
C702	1-107-726-91	CERAMIC CHIP	0.01uF	10%	16V (NEZ5)
C801	1-124-234-00	ELECT	22uF	20%	16V
C802	1-124-584-00	ELECT	100uF	20%	6.3V
C803	1-107-726-91	CERAMIC CHIP	0.01uF	10%	16V
C804	1-107-726-91	CERAMIC CHIP	0.01uF	10%	16V
C805	1-164-360-11	CERAMIC CHIP	0.1uF		16V
C806	1-107-726-91	CERAMIC CHIP	0.01uF	10%	16V
C807	1-126-518-11	ELECT	470uF	20%	4V
C808	1-124-589-11	ELECT	47uF	20%	16V
C809	1-124-234-00	ELECT	22uF	20%	16V
C810	1-107-726-91	CERAMIC CHIP	0.01uF	10%	16V
C811	1-126-157-11	ELECT	10uF	20%	16V
C812	1-162-962-11	CERAMIC CHIP	470PF	10%	50V
C815	1-162-964-11	CERAMIC CHIP	0.001uF	10%	50V
C816	1-107-726-91	CERAMIC CHIP	0.01uF	10%	16V
C817	1-107-726-91	CERAMIC CHIP	0.01uF	10%	16V
C818	1-126-518-11	ELECT	470uF	20%	4V
C819	1-162-919-11	CERAMIC CHIP	22PF	5%	50V
C820	1-164-816-11	CERAMIC CHIP	220PF	2%	50V
C821	1-164-816-11	CERAMIC CHIP	220PF	2%	50V
C822	1-162-919-11	CERAMIC CHIP	22PF	5%	50V
C823	1-107-726-91	CERAMIC CHIP	0.01uF	10%	16V
C826	1-164-360-11	CERAMIC CHIP	0.1uF		16V
C827	1-164-360-11	CERAMIC CHIP	0.1uF		16V
C828	1-164-360-11	CERAMIC CHIP	0.1uF		16V
C829	1-107-726-91	CERAMIC CHIP	0.01uF	10%	16V
C831	1-164-360-11	CERAMIC CHIP	0.1uF		16V
C832	1-164-360-11	CERAMIC CHIP	0.1uF		16V
C833	1-107-726-91	CERAMIC CHIP	0.01uF	10%	16V
C834	1-107-726-91	CERAMIC CHIP	0.01uF	10%	16V
C859	1-124-259-11	ELECT	4.7uF	20%	50V
		< DIODE >			
D801	8-719-988-61	DIODE 1SS355TE-17			

Ref. No.	Part No.	Description			Remark
D804	6-501-138-01	LED SELU2WA10C-LF62 (LCD BACK LIGHT)			(NEZ5)
D804	6-501-139-01	LED SELU2B10A-SLF62 (LCD BACK LIGHT)			(NEZ3)
D805	6-501-138-01	LED SELU2WA10C-LF62 (LCD BACK LIGHT)			(NEZ5)
D805	6-501-139-01	LED SELU2B10A-SLF62 (LCD BACK LIGHT)			(NEZ3)
D806	8-719-063-93	LED SLR325VC-N-T32 (STANDBY)			
D807	8-719-988-61	DIODE 1SS355TE-17			
D809	8-719-000-07	DIODE MC2836			
		< FLAT TYPE WIRE >			
FFC801	1-830-583-11	CABLE, FLEXIBLE FLAT (7 CORE)			
FFC803	1-830-579-11	CABLE, FLEXIBLE FLAT (9 CORE)			
FFC804	1-831-520-11	CABLE, FLEXIBLE FLAT (13 CORE) (NEZ3)			
FFC804	1-831-521-11	CABLE, FLEXIBLE FLAT (15 CORE) (NEZ5)			
FFC805	1-830-901-11	CABLE, FLEXIBLE FLAT (17 CORE)			
		< IC >			
IC801	6-805-894-01	IC MB90803-104			
IC802	6-600-349-21	IC NJL23H400A			
IC803	8-759-713-61	IC PST3429UL			
		< JUMPER RESISTOR >			
JR701	1-216-864-11	SHORT CHIP	0		
JR708	1-216-864-11	SHORT CHIP	0		
JR709	1-216-864-11	SHORT CHIP	0		
JR710	1-216-864-11	SHORT CHIP	0		
JR711	1-216-864-11	SHORT CHIP	0		
JR712	1-216-864-11	SHORT CHIP	0		
JR713	1-216-864-11	SHORT CHIP	0		
JR714	1-216-864-11	SHORT CHIP	0		
JR715	1-216-864-11	SHORT CHIP	0		
JR716	1-216-864-11	SHORT CHIP	0		
JR717	1-216-864-11	SHORT CHIP	0		
JR718	1-216-864-11	SHORT CHIP	0		
JR719	1-216-864-11	SHORT CHIP	0		
JR720	1-216-864-11	SHORT CHIP	0		
		< LIQUID CRYSTAL DISPLAY >			
LCD801	1-805-783-11	DISPLAY PANEL, LIQUID CRYSTAL			
		< TRANSISTOR >			
Q801	8-729-120-28	TRANSISTOR	2SC1623-L5L6		
Q802	8-729-037-13	TRANSISTOR	KTA1271Y		
Q803	8-729-027-43	TRANSISTOR	DTC114EKA-T146		
Q804	8-729-037-13	TRANSISTOR	KTA1271Y		
Q805	8-729-027-43	TRANSISTOR	DTC114EKA-T146		
Q807	8-729-120-28	TRANSISTOR	2SC1623-L5L6		
Q808	8-729-120-28	TRANSISTOR	2SC1623-L5L6		
		< RESISTOR >			
R701	1-216-821-11	METAL CHIP	1K	5%	1/10W
R702	1-216-821-11	METAL CHIP	1K	5%	1/10W
R703	1-216-821-11	METAL CHIP	1K	5%	1/10W
R704	1-216-821-11	METAL CHIP	1K	5%	1/10W
R707	1-216-845-11	METAL CHIP	100K	5%	1/10W

PANEL

Ref. No.	Part No.	Description			Remark
R708	1-216-825-11	METAL CHIP	2.2K	5%	1/10W
			(NEZ3: AEP, UK, EE, RU/NEZ5)		
R709	1-216-833-11	METAL CHIP	10K	5%	1/10W
			(NEZ3: US, CND/NEZ5)		
R710	1-216-821-11	METAL CHIP	1K	5%	1/10W
R711	1-216-817-11	METAL CHIP	470	5%	1/10W
R712	1-216-821-11	METAL CHIP	1K	5%	1/10W
R713	1-216-821-11	METAL CHIP	1K	5%	1/10W
R715	1-216-864-11	SHORT CHIP	0		
R716	1-216-864-11	SHORT CHIP	0		
R721	1-216-864-11	SHORT CHIP	0		
R722	1-216-813-11	METAL CHIP	220	5%	1/10W
R724	1-216-864-11	SHORT CHIP	0		
R725	1-216-821-11	METAL CHIP	1K	5%	1/10W
R726	1-216-821-11	METAL CHIP	1K	5%	1/10W
R803	1-216-809-11	METAL CHIP	100	5%	1/10W
R804	1-216-809-11	METAL CHIP	100	5%	1/10W
R805	1-216-829-11	METAL CHIP	4.7K	5%	1/10W
R806	1-216-821-11	METAL CHIP	1K	5%	1/10W
R807	1-216-809-11	METAL CHIP	100	5%	1/10W
R808	1-216-809-11	METAL CHIP	100	5%	1/10W
R810	1-216-809-11	METAL CHIP	100	5%	1/10W
R811	1-216-809-11	METAL CHIP	100	5%	1/10W
R812	1-216-809-11	METAL CHIP	100	5%	1/10W
R813	1-216-809-11	METAL CHIP	100	5%	1/10W
R814	1-216-809-11	METAL CHIP	100	5%	1/10W
R815	1-216-821-11	METAL CHIP	1K	5%	1/10W
R816	1-216-809-11	METAL CHIP	100	5%	1/10W
R817	1-216-841-11	METAL CHIP	47K	5%	1/10W
R818	1-216-849-11	METAL CHIP	220K	5%	1/10W
R819	1-216-833-11	METAL CHIP	10K	5%	1/10W
R820	1-216-845-11	METAL CHIP	100K	5%	1/10W
R821	1-216-833-11	METAL CHIP	10K	5%	1/10W
R822	1-216-809-11	METAL CHIP	100	5%	1/10W
R824	1-216-809-11	METAL CHIP	100	5%	1/10W
R825	1-216-809-11	METAL CHIP	100	5%	1/10W
R826	1-216-809-11	METAL CHIP	100	5%	1/10W
R827	1-216-809-11	METAL CHIP	100	5%	1/10W
R828	1-216-809-11	METAL CHIP	100	5%	1/10W
R829	1-216-833-11	METAL CHIP	10K	5%	1/10W
R830	1-216-829-11	METAL CHIP	4.7K	5%	1/10W
R831	1-216-845-11	METAL CHIP	100K	5%	1/10W
R832	1-216-809-11	METAL CHIP	100	5%	1/10W
R833	1-216-809-11	METAL CHIP	100	5%	1/10W
R835	1-216-809-11	METAL CHIP	100	5%	1/10W
R836	1-216-809-11	METAL CHIP	100	5%	1/10W
R837	1-216-809-11	METAL CHIP	100	5%	1/10W
R839	1-216-809-11	METAL CHIP	100	5%	1/10W
R840	1-216-833-11	METAL CHIP	10K	5%	1/10W
R841	1-216-821-11	METAL CHIP	1K	5%	1/10W
R842	1-216-833-11	METAL CHIP	10K	5%	1/10W
R843	1-216-833-11	METAL CHIP	10K	5%	1/10W
R844	1-216-837-11	METAL CHIP	22K	5%	1/10W
R845	1-216-833-11	METAL CHIP	10K	5%	1/10W
R846	1-216-829-11	METAL CHIP	4.7K	5%	1/10W
R847	1-216-829-11	METAL CHIP	4.7K	5%	1/10W
R848	1-216-829-11	METAL CHIP	4.7K	5%	1/10W
R849	1-216-829-11	METAL CHIP	4.7K	5%	1/10W
R850	1-216-821-11	METAL CHIP	1K	5%	1/10W
R851	1-216-825-11	METAL CHIP	2.2K	5%	1/10W
R852	1-216-821-11	METAL CHIP	1K	5%	1/10W
R853	1-216-825-11	METAL CHIP	2.2K	5%	1/10W
R854	1-216-864-11	SHORT CHIP	0		
R856	1-216-853-11	METAL CHIP	470K	5%	1/10W
R857	1-216-833-11	METAL CHIP	10K	5%	1/10W
R858	1-216-833-11	METAL CHIP	10K	5%	1/10W
R859	1-216-841-11	METAL CHIP	47K	5%	1/10W
R860	1-216-841-11	METAL CHIP	47K	5%	1/10W
R861	1-216-837-11	METAL CHIP	22K	5%	1/10W
R862	1-216-809-11	METAL CHIP	100	5%	1/10W
R863	1-216-809-11	METAL CHIP	100	5%	1/10W
R868	1-216-841-11	METAL CHIP	47K	5%	1/10W
R869	1-216-833-11	METAL CHIP	10K	5%	1/10W
R870	1-216-864-11	SHORT CHIP	0		
R871	1-216-833-11	METAL CHIP	10K	5%	1/10W
R872	1-216-821-11	METAL CHIP	1K	5%	1/10W
R873	1-216-825-11	METAL CHIP	2.2K	5%	1/10W
R874	1-216-825-11	METAL CHIP	2.2K	5%	1/10W
R875	1-216-829-11	METAL CHIP	4.7K	5%	1/10W
R876	1-216-829-11	METAL CHIP	4.7K	5%	1/10W
			(NEZ3: AEP, UK, EE, RU/NEZ5)		
R877	1-216-833-11	METAL CHIP	10K	5%	1/10W
			(NEZ3: AEP, UK, EE, RU/NEZ5)		
R878	1-216-833-11	METAL CHIP	10K	5%	1/10W
R879	1-216-821-11	METAL CHIP	1K	5%	1/10W
R880	1-216-825-11	METAL CHIP	2.2K	5%	1/10W
R881	1-216-825-11	METAL CHIP	2.2K	5%	1/10W
R882	1-216-829-11	METAL CHIP	4.7K	5%	1/10W
R883	1-216-829-11	METAL CHIP	4.7K	5%	1/10W
R884	1-216-825-11	METAL CHIP	2.2K	5%	1/10W
R885	1-216-825-11	METAL CHIP	2.2K	5%	1/10W
R886	1-216-864-11	SHORT CHIP	0		
		< VARIABLE RESISTOR >			
RV801	1-479-195-11	ENCODER (VOLUME)			
		< SWITCH >			
S801	1-786-050-21	SWITCH, KEY BOARD (I/⏻)			
S802	1-786-050-21	SWITCH, KEY BOARD (DSGX)			
S803	1-786-050-21	SWITCH, KEY BOARD (CD SYNC)			
S804	1-786-050-21	SWITCH, KEY BOARD (● PAUSE/START)			
S805	1-786-050-21	SWITCH, KEY BOARD (PLAY MODE/TUNING MODE)			
S806	1-786-050-21	SWITCH, KEY BOARD (🗀+) (NEZ3: AEP, UK, EE, RU/NEZ5)			
S807	1-786-050-21	SWITCH, KEY BOARD (🗀–) (NEZ3: AEP, UK, EE, RU/NEZ5)			
S808	1-786-050-21	SWITCH, KEY BOARD (TAPE ►)			
S809	1-786-050-21	SWITCH, KEY BOARD (CD ►II)			
S810	1-786-050-21	SWITCH, KEY BOARD (TUNER/BAND)			
S811	1-786-050-21	SWITCH, KEY BOARD (■)			
S812	1-786-050-21	SWITCH, KEY BOARD (TUNING –, I◁◁ ◄◄)			
S813	1-786-050-21	SWITCH, KEY BOARD (TUNING +, ►► ▷▷I)			
		< VIBRATOR >			
X801	1-579-463-11	VIBRATOR, CRYSTAL (32.768kHz)			

PANEL SHIELD

Ref. No.	Part No.	Description	Remark
X802	1-795-054-61	VIBRATOR, CERAMIC (10MHz)	
**********			
	A-1139-356-A	SHIELD BOARD, COMPLETE (NEZ3: US, CND)	
		**********	
**********			
		MISCELLANEOUS	
		**********	
55	1-796-352-71	DECK, MECHANICAL (CMAL5Z231)	
152	1-452-899-11	MAGNET	
⚠160	8-820-126-01	OPTICAL PICK-UP BLOCK	(KSM-213CDP/C2NP) (Including spindle motor (M401), sled motor (M402))
163	1-827-992-11	WIRE (FLAT TYPE) (16 CORE)	
164	1-783-140-11	WIRE (FLAT TYPE) (23 CORE)	
205	1-693-625-11	TUNER UNIT (FM/AM) (NEZ3: US, CND)	
205	1-693-626-11	TUNER UNIT (FM/AM) (NEZ5)	
205	1-693-629-11	TUNER UNIT (FM/AM) (NEZ3: AEP, UK, EE, RU)	
206	1-769-946-11	WIRE (FLAT TYPE) (11 CORE) (NEZ3)	
206	1-773-011-11	WIRE (FLAT TYPE) (15 CORE) (NEZ5)	
⚠208	1-769-744-81	CORD, POWER (UK)	
⚠208	1-830-188-11	CORD, POWER (AEP, EE, RU)	
⚠208	1-830-190-11	CORD, POWER (US, CND)	
M301	1-787-103-11	FAN, DC (NEZ5)	
S201	1-771-853-11	SWITCH, DETECTION (LIMIT)	
S820	1-692-960-21	SWITCH, PUSH (1 KEY)	(CD LID OPEN/CLOSE DETECT)
⚠T902	1-443-566-11	TRANSFORMER, POWER (NEZ5)	
⚠T902	1-443-573-11	TRANSFORMER, POWER	(NEZ3: AEP, UK, EE, RU)
⚠T902	1-443-626-11	TRANSFORMER, POWER (NEZ3: US, CND)	
**********			
		ACCESSORIES	
		**********	
⚠	1-770-019-61	ADAPTOR, CONVERSION PLUG	(NEZ3: UK/NEZ5: UK)

REVISION HISTORY

Clicking the version allows you to jump to the revised page.
Also, clicking the version at the upper right on the revised page allows you to jump to the next revised page.

Ver.	Date	Description of Revision
1.0	2005.03	New
1.1	2005.08	Change of Base Unit (BU-K7BD81D-G → BU-K7BD81D2) Change of Part No. for CD board Change of Part No. for Ref. No. C320, R204 on CD board (ECN-ECA96382)
1.2	2005.09	Change of specifications (SUPPLEMENT-1) NEZ3: US, Canadian, AEP, UK, East European, Russian models only NEZ5: AEP, UK, East European, Russian models only (ENG-05007)
1.3	2005.11	Addition of Method to Distinguished by Serial No. (ENG-05015)

SS-CNEZ3/CNEZ5

SERVICE MANUAL

Ver. 1.0 2005.03

US Model
Australian Model
SS-CNEZ3
Canadian Model
AEP Model
UK Model
E Model
SS-CNEZ3/CNEZ5

- SS-CNEZ3 is the speaker system in CMT-NEZ3.
- SS-CNEZ5 is the speaker system in CMT-NEZ5.

Photo: SS-CNEZ3

Photo: SS-CNEZ5

SPECIFICATIONS

SS-CNEZ5

Speaker system	2-way, bass-reflex type
Speaker units	
Woofer:	10 cm dia., cone type
Tweeter:	4 cm dia., cone type
Nominal impedance	6 ohms
Dimensions (w/h/d)	Approx. 145 × 235 × 175 mm
Mass	Approx. 1.9 kg net per speaker

SS-CNEZ3

Speaker system	Full Range Speaker System
Speaker units	
Woofer:	
North American model:	8 cm dia., cone type
Other models:	10 cm dia., cone type
Nominal impedance	6 ohms
Dimensions (w/h/d)	Approx. 145 × 235 × 155 mm
Mass	
North American model:	Approx. 1.4 kg net per speaker
Other models:	Approx. 1.5 kg net per speaker

Design and specifications are subject to change without notice.

ACCESSORIES

Ref. No.	Part No.	Description	Remark
1	A-1090-980-A	OVERALL ASSY	(SS-CNEZ3:AEP, EE, RU, UK, MX, E, EA, SP, TW, KR, AUS)
1	A-1097-669-A	OVERALL ASSY	(SS-CNEZ3:US, CND, AR, E51)
2	A-1091-096-A	SYSTEM (ASSY) (for SILVER)	(SS-CNEZ5)
2	A-1097-667-A	SYSTEM (ASSY) (for WHITE)	(SS-CNEZ5)
3	X-2048-416-1	FRAME (ASSY), GRILLE (for SILVER)	(SS-CNEZ5)
3	X-2048-942-1	FRAME (ASSY), GRILLE (for WHITE)	(SS-CNEZ5)

- Abbreviation

AR	: Argentina model	KR	: Korean model
AUS	: Australian model	MX	: Mexican model
CND	: Canadian model	RU	: Russian model
E51	: Chirean and Peruvian models	SP	: Singapore model
EA	: Saudi Arabia model	TW	: Taiwan model
EE	: East European model		

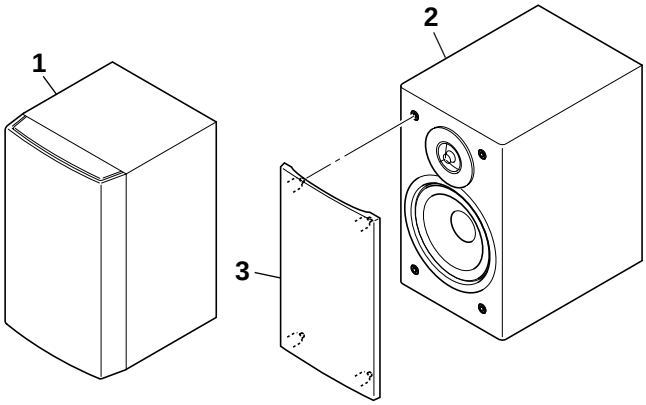

– SS-CNEZ3 – *– SS-CNEZ5 –*

SPEAKER SYSTEM

9-879-529-01
2005C05-1
© 2005.03

Sony Corporation
Personal Audio Group
Published by Sony Engineering Corporation

SONY®

REVISION HISTORY

Clicking the version allows you to jump to the revised page.
Also, clicking the version at the upper right on the revised page allows you to jump to the next revised page.

Ver.	Date	Description of Revision
1.0	2005.03	New

HCD-NEZ3/NEZ5

SERVICE MANUAL

Ver. 1.3 2005.11

US Model
Australian Model
HCD-NEZ3
Canadian Model
AEP Model
UK Model
E Model
HCD-NEZ3/NEZ5

Photo: HCD-NEZ5

- HCD-NEZ3 is the amplifier, CD player, tape deck and tuner section in CMT-NEZ3.
- HCD-NEZ5 is the amplifier, CD player, tape deck and tuner section in CMT-NEZ5.

CD Section	Model Name Using Similar Mechanism	NEW
	Base Unit Name	BU-K7BD81D2 or BU-K8BD83S-WOD
	Optical Pick-up Name	KSM-213EDP or KSM-213CDP
TAPE Section	Model Name Using Similar Mechanism	NEW
	Tape Transport Mechanism Type	CMAL5Z231

SPECIFICATIONS

Main unit

AUDIO POWER SPECIFICATIONS

POWER OUTPUT AND TOTAL HARMONIC DISTORTION:
(The United States model only)

CMT-NEZ5

With 6 ohm loads, both channels driven, from 120 – 10,000 Hz; rated 18 watts per channel minimum RMS power, with no more than 10% total harmonic distortion from 250 milliwatts to rated output.

CMT-NEZ3

With 6 ohm loads, both channels driven, from 120 – 10,000 Hz; rated 9 watts per channel minimum RMS power, with no more than 10% total harmonic distortion from 250 milliwatts to rated output.

Amplifier section

CMT-NEZ5

European model:
DIN power output (rated): 18 + 18 W (6 ohms at 1 kHz, DIN)
Continuous RMS power output (reference): 25 + 25W (6 ohms at 1 kHz, 10% THD)
Music power output (reference): 38 + 38 W

Pan-American model:
Continuous RMS power output (reference): 20 + 20 W (6 ohms at 1 kHz, 10% THD)

Other models:
The following measured at AC 120, 220 or 240 V, 50/60 Hz
DIN power output (rated): 14 + 14 W (6 ohms at 1 kHz, DIN)
Continuous RMS power output (reference): 20 + 20 W (6 ohms at 1 kHz, 10% THD)

Inputs
AUDIO IN: Sensitivity 250 mV, impedance 47 kilohms

Outputs
PHONES: Accepts headphones with an impedance of 8 ohms or more
SPEAKER: Accepts impedance of 6 to 16 ohms.

CMT-NEZ3

North-American model:
Continuous RMS power output (reference): 10 + 10 W (6 ohms at 1 kHz, 10% THD)

European model:
DIN power output (rated): 11 + 11 W (6 ohms at 1 kHz, DIN)
Continuous RMS power output (reference): 15 + 15 W (6 ohms at 1 kHz, 10% THD)
Music power output (reference): 28 + 28 W

Other models:
The following measured at AC 120, 220 or 240 V, 50/60 Hz
DIN power output (rated): 11 + 11 W (6 ohms at 1 kHz, DIN)
Continuous RMS power output (reference): 15 + 15 W (6 ohms at 1 kHz, 10% THD)

Inputs
AUDIO IN: Sensitivity 250 mV, impedance 47 kilohms

Outputs
PHONES: Accepts headphones with an impedance of 8 ohms or more
SPEAKER: Accepts impedance of 6 to 16 ohms.

– Continued on next page –

COMPACT DISC DECK RECEIVER

9-879-528-04
2005K05-1
© 2005.11

Sony Corporation
Personal Audio Division
Published by Sony Engineering Corporation

SONY®

CD player section

Laser Diode Properties	Emission duration: continuous Laser Output: Less than 44.6 µW (This output is the value measurement at a distance of 200 mm from the objective lens surface on the Optical Pick-up Block with 7 mm aperture)
Frequency response	20 Hz – 20 kHz

Tape deck section

Recording system	4-track 2-channel, stereo

Tuner section

FM stereo, FM/AM superheterodyne tuner

FM tuner section

Tuning range	87.5 – 108.0 MHz
Antenna	FM lead antenna
Antenna terminals	75 ohms unbalanced
Intermediate frequency	10.7 MHz

AM tuner section

Tuning range	
Pan-American model:	530 – 1,710 kHz (with the tuning interval set at 10 kHz) 531 – 1,710 kHz (with the tuning interval set at 9 kHz)
European model:	531 – 1,602 kHz (with the tuning interval set at 9 kHz)
Other models:	530 – 1,710 kHz (with the tuning interval set at 10 kHz) 531 – 1,602 kHz (with the tuning interval set at 9 kHz)
Antenna	AM loop antenna, external antenna terminal
Intermediate frequency	450 kHz

General

Power requirements	
North American model:	AC 120 V, 60 Hz
Mexican model:	AC 120 V, 60 Hz
European model:	AC 230 V, 50/60 Hz
Australian model:	AC 230 – 240 V, 50/60 Hz
Korean model:	AC 220 V, 60 Hz
Chinese model:	AC 220 V, 50/60 Hz
Taiwanese model:	AC 120 V, 50/60 Hz
Argentine model	AC 220 V, 50/60 Hz
Saudi Arabian model:	AC 120 – 127, 220, 230 – 240 V, 50/60 Hz
Other models:	AC 120, 220 or 230 – 240 V, 50/60 Hz Adjustable with voltage selector
Power consumption	
CMT-NEZ5	
European model:	60 W 0.3 W (in Power Saving Mode)
Other models:	50 W
CMT-NEZ3	
North American model:	40 W
European model:	45 W 0.3 W (in Power Saving Mode)
Other models:	45 W
Dimensions (w/h/d) (excl. speakers)	Approx. 164 × 235 × 265 mm
Mass (excl. speakers)	
CMT-NEZ5:	Approx. 3.6 kg
CMT-NEZ3	
North American model:	Approx. 2.8 kg
Other models:	Approx. 3.6 kg

Design and specifications are subject to change without notice.

Notes on chip component replacement

- Never reuse a disconnected chip component.
- Notice that the minus side of a tantalum capacitor may be damaged by heat.

Flexible Circuit Board Repairing

- Keep the temperature of the soldering iron around 270 ˚C during repairing.
- Do not touch the soldering iron on the same conductor of the circuit board (within 3 times).
- Be careful not to apply force on the conductor when soldering or unsoldering.

CAUTION

Use of controls or adjustments or performance of procedures other than those specified herein may result in hazardous radiation exposure.

The following caution label is located inside the unit.

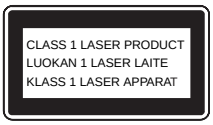

This appliance is classified as a CLASS 1 LASER product.

This label is located on the rear exterior.

SAFETY CHECK-OUT

After correcting the original service problem, perform the following safety check before releasing the set to the customer:
Check the antenna terminals, metal trim, "metallized" knobs, screws, and all other exposed metal parts for AC leakage.
Check leakage as described below.

SAFETY-RELATED COMPONENT WARNING!!

COMPONENTS IDENTIFIED BY MARK ⚠ OR DOTTED LINE WITH MARK ⚠ ON THE SCHEMATIC DIAGRAMS AND IN THE PARTS LIST ARE CRITICAL TO SAFE OPERATION. REPLACE THESE COMPONENTS WITH SONY PARTS WHOSE PART NUMBERS APPEAR AS SHOWN IN THIS MANUAL OR IN SUPPLEMENTS PUBLISHED BY SONY.

LEAKAGE TEST

The AC leakage from any exposed metal part to earth ground and from all exposed metal parts to any exposed metal part having a return to chassis, must not exceed 0.5 mA (500 microamperes.). Leakage current can be measured by any one of three methods.

1. A commercial leakage tester, such as the Simpson 229 or RCA WT-540A. Follow the manufacturers' instructions to use these instruments.
2. A battery-operated AC milliammeter. The Data Precision 245 digital multimeter is suitable for this job.
3. Measuring the voltage drop across a resistor by means of a VOM or battery-operated AC voltmeter. The "limit" indication is 0.75 V, so analog meters must have an accurate low-voltage scale. The Simpson 250 and Sanwa SH-63Trd are examples of a passive VOM that is suitable. Nearly all battery operated digital multimeters that have a 2 V AC range are suitable. (See Fig. A)

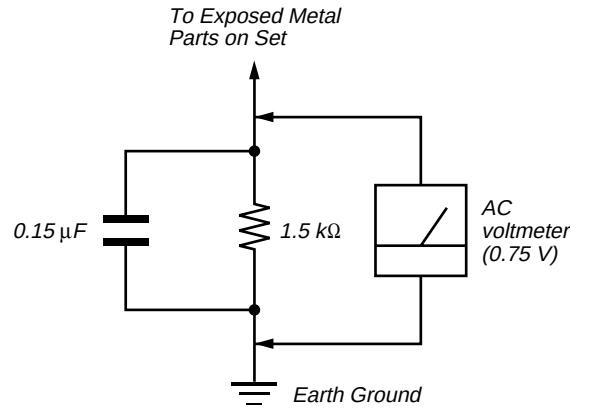

Fig. A. Using an AC voltmeter to check AC leakage.

ATTENTION AU COMPOSANT AYANT RAPPORT À LA SÉCURITÉ!

LES COMPOSANTS IDENTIFIÉS PAR UNE MARQUE ⚠ SUR LES DIAGRAMMES SCHÉMATIQUES ET LA LISTE DES PIÈCES SONT CRITIQUES POUR LA SÉCURITÉ DE FONCTIONNEMENT. NE REMPLACER CES COM- POSANTS QUE PAR DES PIÈCES SONY DONT LES NUMÉROS SONT DONNÉS DANS CE MANUEL OU DANS LES SUPPLÉMENTS PUBLIÉS PAR SONY.

TABLE OF CONTENTS

1. SERVICING NOTES 4

2. GENERAL 6

3. DISASSEMBLY
3-1. Disassembly Flow 8
3-2. Cabinet 8
3-3. Cabinet (Top) Section 9
3-4. Base Unit (BU-K7BD81D2) 9
3-5. Front Panel Section 10
3-6. Mechanical Deck (CMAL5Z231) 10
3-7. MAIN Board 11
3-8. Tuner Unit 11

4. TEST MODE 12

5. MECHANICAL ADJUSTMENTS 13

6. ELECTRICAL ADJUSTMENTS 13

7. DIAGRAMS
7-1. Block Diagram – CD SERVO Section – 15
7-2. Block Diagram – MAIN Section – 16
7-3. Printed Wiring Board – CD Board – 18
7-4. Schematic Diagram – CD Board – 19
7-5. Printed Wiring Boards – MAIN Section – 21
7-6. Schematic Diagram – MAIN Section (1/2) – 22
7-7. Schematic Diagram – MAIN Section (2/2) – 23
7-8. Printed Wiring Board – PANEL Board – 24
7-9. Schematic Diagram – PANEL Board – 25
7-10. Printed Wiring Boards – DC Section – 26
7-11. Printed Wiring Board – AC Board – 27
7-12. Schematic Diagram – POWER SUPPLY Section – 28

8. EXPLODED VIEWS
8-1. Cabinet Section 35
8-2. Mechanical Deck Section 36
8-3. Panel Board Section 37
8-4. Cabinet (Top) Section 38
8-5. MAIN Board Section 39
8-6. AC Board, DC Board Section 40

9. ELECTRICAL PARTS LIST 41

SECTION 1
SERVICING NOTES

NOTES ON HANDLING THE OPTICAL PICK-UP BLOCK OR BASE UNIT

The laser diode in the optical pick-up block may suffer electrostatic break-down because of the potential difference generated by the charged electrostatic load, etc. on clothing and the human body.
During repair, pay attention to electrostatic break-down and also use the procedure in the printed matter which is included in the repair parts.
The flexible board is easily damaged and should be handled with care.

: LEAD FREE MARK

Unleaded solder has the following characteristics.

- Unleaded solder melts at a temperature about 40 ˚C higher than ordinary solder.
  Ordinary soldering irons can be used but the iron tip has to be applied to the solder joint for a slightly longer time.
  Soldering irons using a temperature regulator should be set to about 350 ˚C.
  Caution: The printed pattern (copper foil) may peel away if the heated tip is applied for too long, so be careful!
- Strong viscosity
  Unleaded solder is more viscou-s (sticky, less prone to flow) than ordinary solder so use caution not to let solder bridges occur such as on IC pins, etc.
- Usable with ordinary solder
  It is best to use only unleaded solder but unleaded solder may also be added to ordinary solder.

LASER DIODE AND FOCUS SEARCH OPERATION CHECK

During normal operation of the equipment, emission of the laser diode is prohibited unless the upper lid is closed while turning ON the S1820. (push switch type)
The following checking method for the laser diode is operable.

- **Method**
  Emission of the laser diode is visually checked.

1. Open the upper lid.
2. Push the S1820 as shown in Fig.1.

Note: Do not push the detection lever strongly, or it may be bent or damaged.

3. Press the ▶II button.
4. Check the object lens for confirming normal emission of the laser diode. If not emitting, there is a trouble in the automatic power control circuit or the optical pick-up.
   In this operation, the object lens will move up and down 2 times along with inward motion for the focus search.

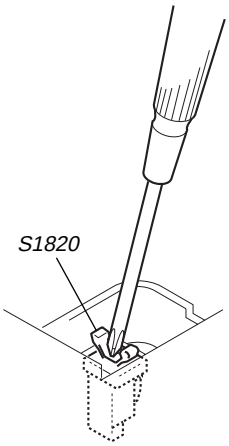

Fig.1 Method to push the S1820

NOTES ON LASER DIODE EMISSION CHECK

The laser beam on this model is concentrated so as to be focused on the disc reflective surface by the objective lens in the optical pick-up block. Therefore, when checking the laser diode emission, observe from more than 30 cm away from the objective lens.

UNLEADED SOLDER

Boards requiring use of unleaded solder are printed with the lead-free mark (LF) indicating the solder contains no lead.
(Caution: Some printed circuit boards may not come printed with the lead free mark due to their particular size)

• MODEL IDENTIFICATION
– Rear Cabinet –

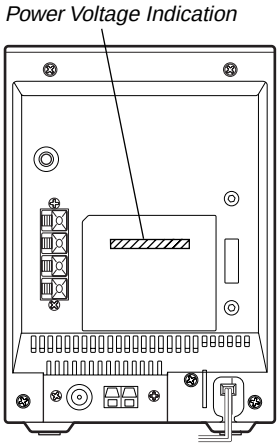

MODEL	Power Voltage Incdication
NEZ3: US, CND	AC: 120 V 60 Hz 40 W
NEZ3: AEP, UK, EE, RU	AC: 230 V ∿ 50/60 Hz 45 W
NEZ3: E, E51, SP	AC: 120 V/220 V/230 – 240 V ∿ 50/60 Hz 45 W
NEZ3: EA	AC: 120 – 127 V/220 V/230 – 240 V ∿ 50/60 Hz 45 W
NEZ3: MX	ca ∿ 120 V 60 Hz 45 W
NEZ3: TW	AC: 120 V ∿ 50/60 Hz 45 W
NEZ3: AR	ca ∿ 220 V 50/60 Hz 45 W
NEZ3: KR	AC: 220 V ∿ 60 Hz 45 W
NEZ3: AUS	AC: 230 – 240 V ∿ 50/60 Hz 45 W
NEZ5: CND	AC: 120 V 60 Hz 50 W
NEZ5: AEP, UK, EE, RU	AC: 230 V ∿ 50/60 Hz 60 W
NEZ5: E, E51, SP	AC: 120 V/220 V/230 – 240 V ∿ 50/60 Hz 50 W
NEZ5: MX	ca ∿ 120 V 60 Hz 50 W
NEZ5: TW	AC: 120 V ∿ 50/60 Hz 50 W
NEZ5: AR	ca ∿ 220 V 50/60 Hz 50 W
NEZ5: KR	AC: 220 V ∿ 60 Hz 50 W

- Abbreviation
  AR : Argentina model
  AUS : Australian model
  CND: Canadian model
  E51 : Chilean and Peruvian model
  EA : Saudi Arabia model
  EE : East European model
  KR : Korean model
  MX : Mexican model
  RU : Russian model
  SP : Singapore model
  TW : Taiwan model

SERVICE POSITION

– CD BOARD –

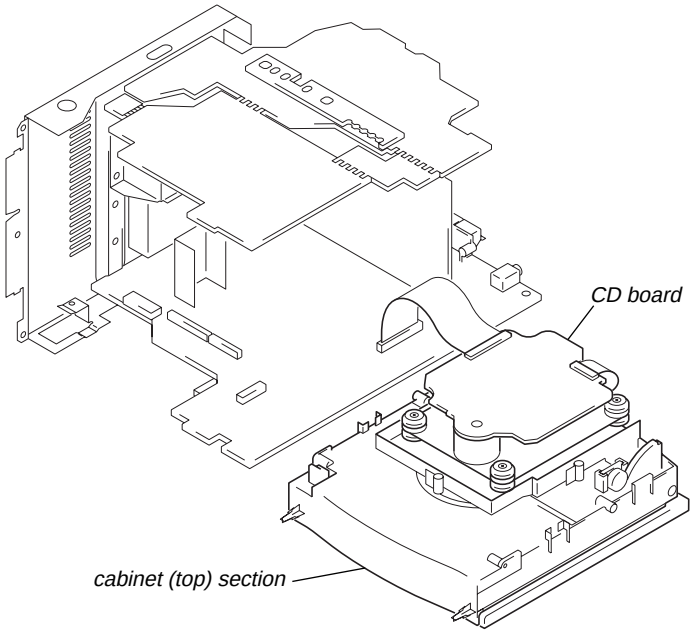

– TAPE MECHANICAL DECK –

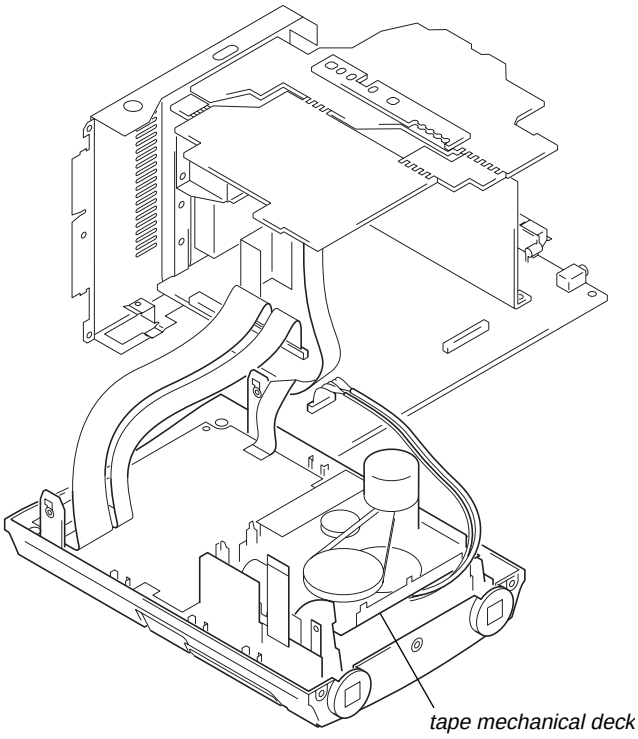

SECTION 2
GENERAL

This section is extracted from instruction manual.

Main unit

ALPHABETICAL ORDER

A – S

CD SYNC 18
Display window 6
DSGX 3
PHONES jack 13
PLAY MODE 5
Remote sensor 2

T – Z

Tape deck 12
TUNER/BAND 15
TUNING +/– 10
TUNING MODE 5
VOLUME control 9

BUTTON DESCRIPTIONS

I/⏻ (power) 1
● PAUSE/START 4
⏏ PUSH OPEN/CLOSE (CD open/close) 7
🗀 +/– 8*
⏮ ◀◀/▶▶ ⏭ (rewind/fast forward, go back/go forward) 10
PUSH OPEN/CLOSE ⏏ (tape open/close) 11
■ (stop) 14
CD/▶II (play) 16
TAPE/▶ 17
* Except for North American model CMT-NEZ3

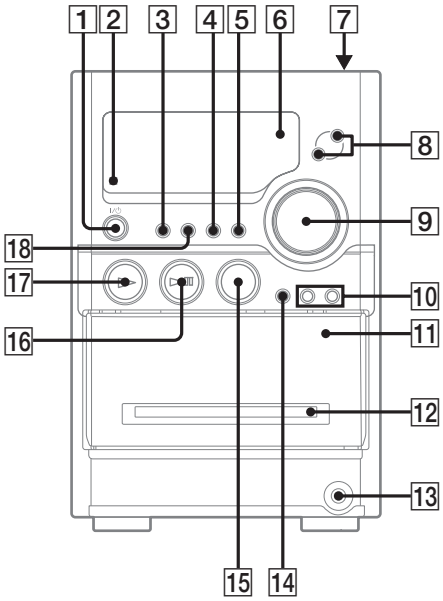

Remote control

ALPHABETICAL ORDER

A – O

CD 16
CLEAR 13
CLOCK/TIMER SELECT 2
CLOCK/TIMER SET 3
DISPLAY 19
ENTER 9
EQ 12
FM MODE 4
FUNCTION 6

P – Z

PLAY MODE 18
REPEAT 4
SLEEP 20
TAPE 15
TUNER/BAND 5
TUNER MEMORY 17
TUNING MODE 18
VOLUME +/– 10

BUTTON DESCRIPTIONS

I/⏻ (power) 1
◀◀/▶▶ (rewind/fast forward) 7
▶ (play) 8
❚❚ (pause) 8
■ (stop) 8
🗀 +/– 11
⏮/⏭ (go back/go forward) 14
–/+ (tuning) 14

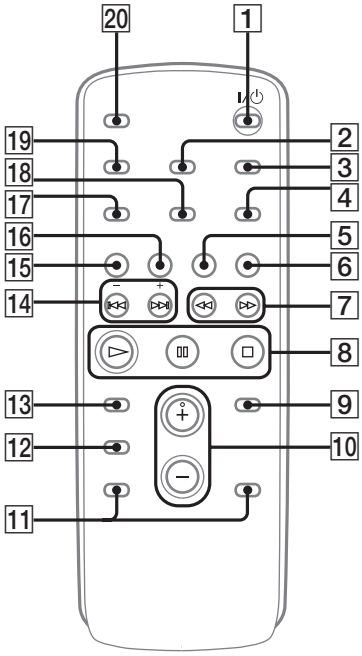

Setting the clock

Use buttons on the remote for the operation.

1 **Press I/⏻ to turn on the unit.**

2 **Press CLOCK/TIMER SET.**

3 **Press ⏮ or ⏭ repeatedly to set the hour.**

4 **Press ENTER.**

5 **Press ⏮ or ⏭ repeatedly to set the minute.**

6 **Press ENTER.**

The clock starts working.

To adjust the clock

1 Press CLOCK/TIMER SET.

2 Press ⏮ or ⏭ repeatedly to select "CLOCK", then press ENTER.

3 Do the same procedures as step 3 to 6 above.

Note

The clock is not displayed in Power Saving Mode.

SECTION 3
DISASSEMBLY

- This set can be disassembled in the order shown below.

3-1. DISASSEMBLY FLOW

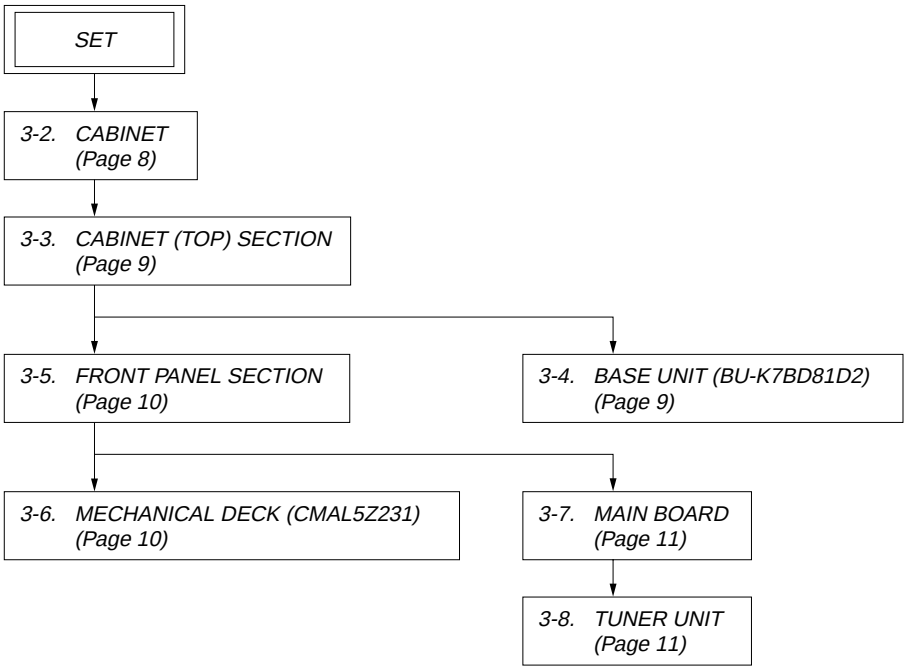

Note: Follow the disassembly procedure in the numerical order given.

3-2. CABINET

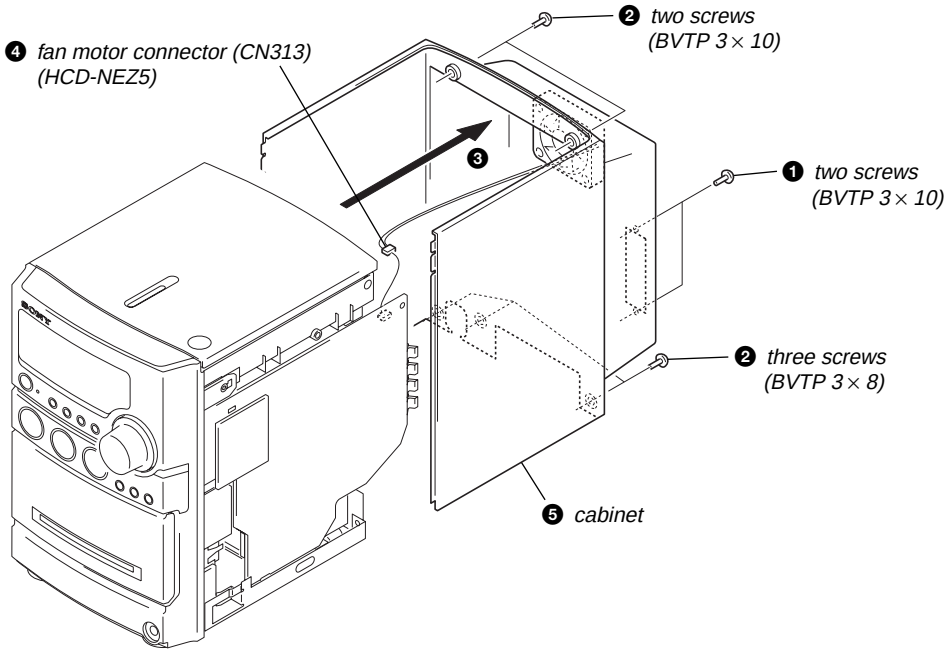

3-3. CABINET (TOP) SECTION

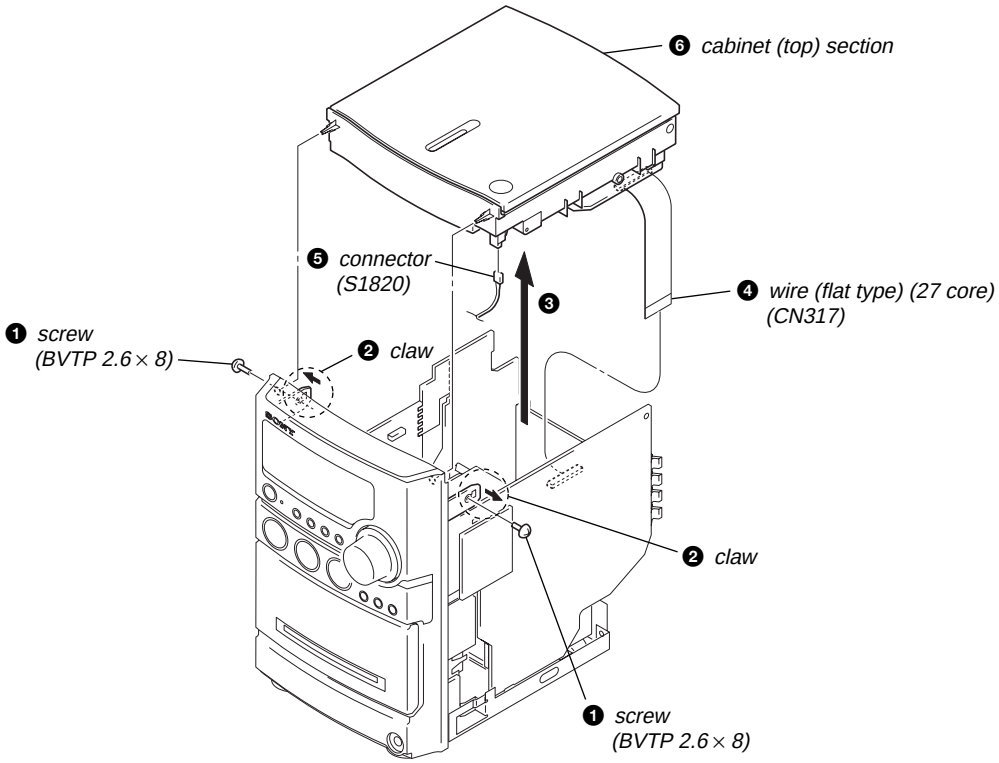

3-4. BASE UNIT (BU-K7BD81D2)

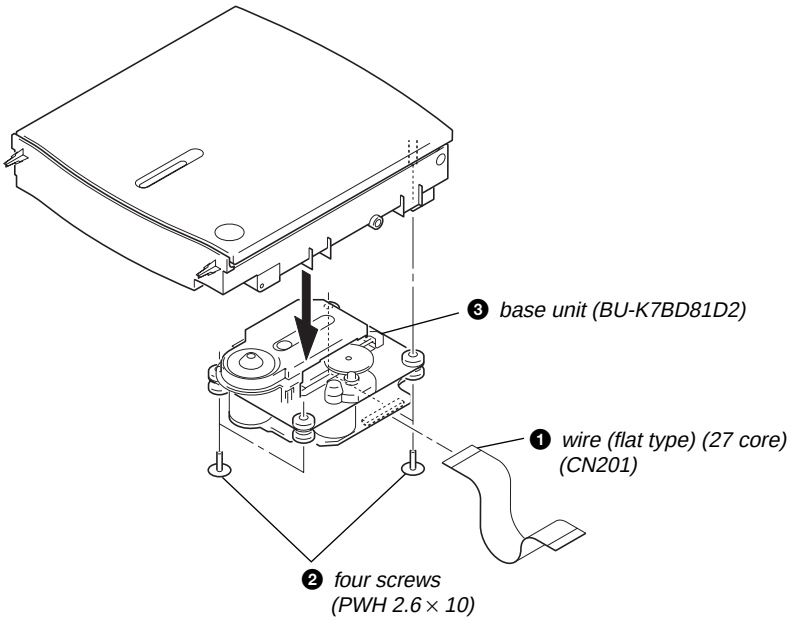

3-5. FRONT PANEL SECTION

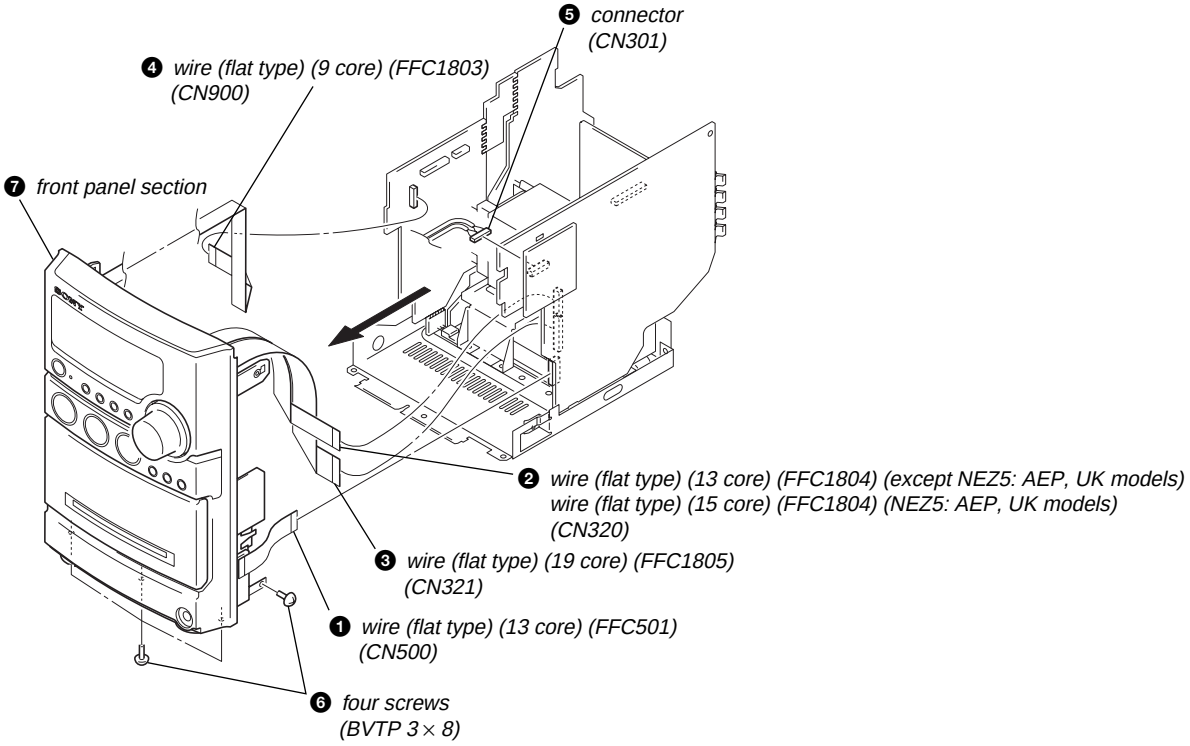

3-6. MECHANICAL DECK (CMAL5Z231)

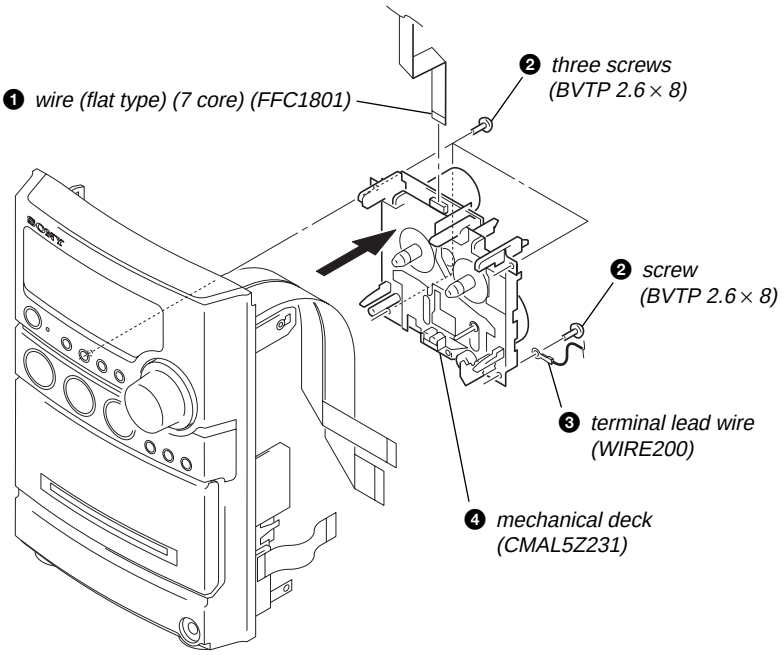

3-7. MAIN BOARD

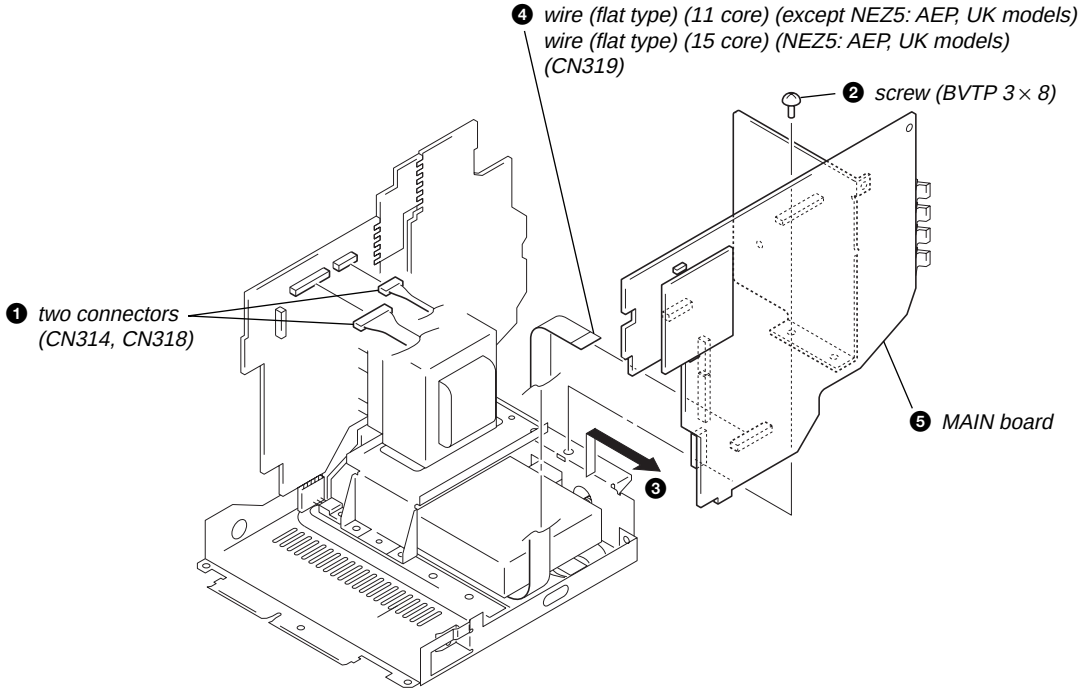

3-8. TUNER UNIT

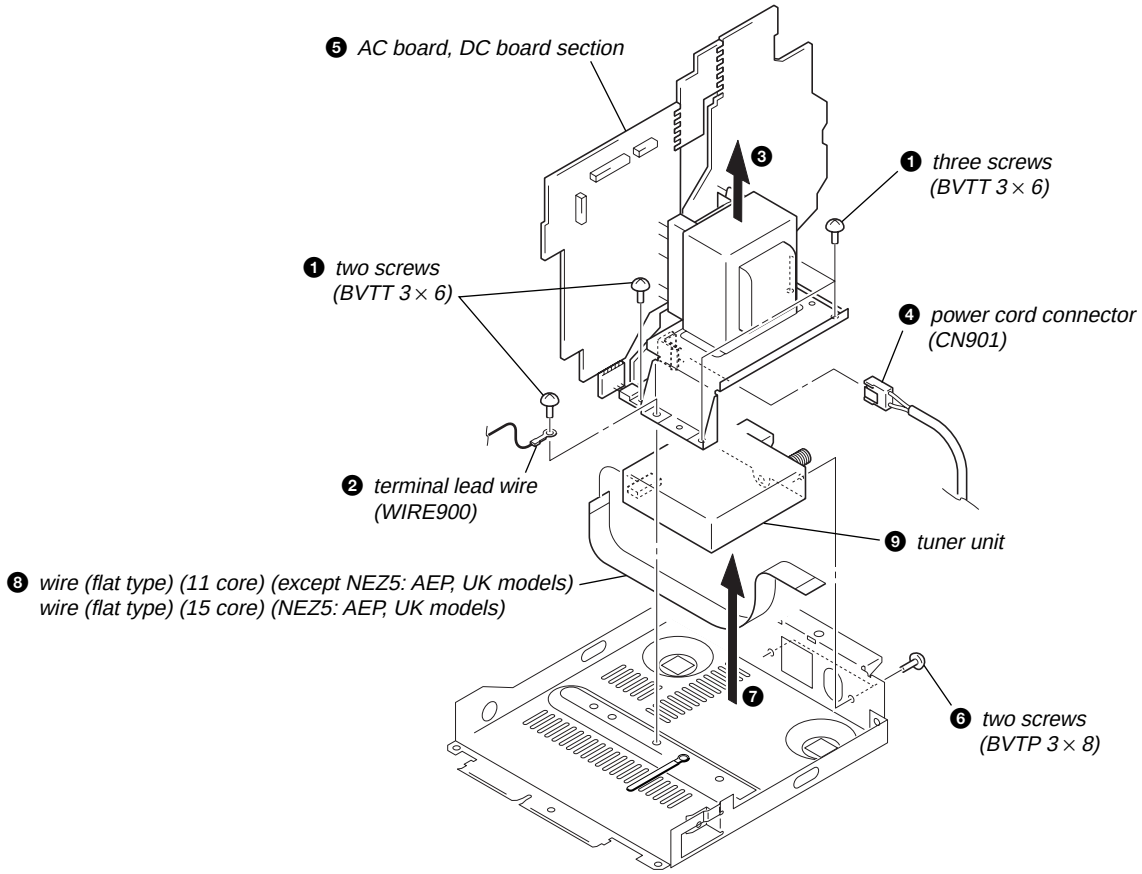

SECTION 4
TEST MODE

COLD RESET

* The cold reset clears all data including preset data stored in the RAM to initial conditions. Execute this mode when returning the set to the customer.

Procedure:

1. Press the [I/⏻] button to turn the power on.
2. While pressing the [■] button, press the [I/⏻] button and turn the [VOLUME] knob in the counter-clock wise.
3. The message "RESET" is displayed and the set is reset.

PANEL TEST

* All segments of liquid crystal display are tested, and the version and released date of the micro computer are displayed.

Procedure:

1. Press the [I/⏻] button to turn the power on.
2. While pressing the [DSGX] button, press the [⏮ ◀◀] button and turn the [VOLUME] knob in the counter-clock wise. Then all segments of liquid crystal display are turned on.
3. Press the [DSGX] button, the version and released date of the micro computer are displayed.
   example of display:

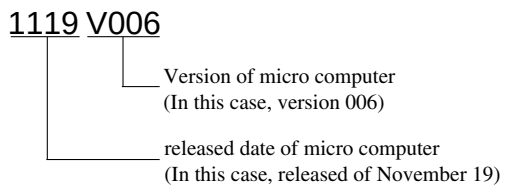

4. Press the [TUNER/BAND] button, the model name and distination are displayed.
   example of display:

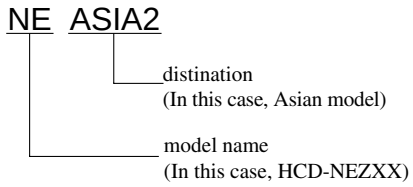

5. Press the [PLAY MODE/TUNING MODE] button, "KEY 0 0" is displayed on the liquid crystal display, and key test mode in. Each time a key is pressed, the numerical value corresponding to each key is displayed on the liquid crystal display.
6. To exit from this mode, perform the "COLD RESET".

TUNER STEP CHANGE-OVER

* Either the 9 kHz step or 10 kHz step can be selected for the AM channel step.

Procedure:

1. Set the FUNCTION to AM, and press the [I/⏻] button to turn the power off.
2. While depressing the [TUNER/BAND] button, press the [I/⏻] button.
3. The message "9K STEP" or "10K STEP" is displayed on the liquid crystal display, and thus the channel step is changed over.

CD ERROR HISTORY

* This mode can be used for CD error history display.

Procedure:

1. Set the FUNCTION to CD.
2. While pressing the [DSGX] button, press the [CD ▶II] button and turn the [VOLUME] knob in the counter-clock wise.
3. CD error history is displayed on the liquid crystal display. Each time [⏮ ◀◀] or [▶▶ ⏭] button is pressed, CD error history is changed.

CD POWER MANEGE

* This mode is for switch the CD power supply on/off. Even if this state pulls out AC plug, it is held.

Procedure:

1. Press the [I/⏻] button to turn the power on.
2. Set the FUNCTION to CD.
3. Press the [I/⏻] button again to turn the power off (standby).
4. While pressing the [CD ▶II] button, press the [I/⏻] button.
5. If turns power on and display "CD POWER", then display "ON" or "OFF".

SECTION 5
MECHANICAL ADJUSTMENTS

- **Precaution**

1. Clean the following parts with a denatured-alcohol-moistened swab :
   record/playback head　　pinch roller
   erase head　　rubber belts
   capstan　　idlers
2. Demagnetize the record/playback head with a head demagnetizer. (Do not bring the head magnetizer close to the erase head.)
3. Do not use a magnetized screwdriver for the adjustments.
4. After the adjustments, appiy suitable locking compound to the parts adjusted.
5. The adjustments should be performed with the rated power supply voltage unless otherwise noted.

- **Torque Measurement**

Mode	Torque Meter	Meter Reading
FWD	CQ-102C	2.95 – 6.86 mN·m (30 – 70 g·cm) (0.42 – 0.97 oz·inch)
FWD Back Tension	CQ-102C	0.15 – 5.39 mN·m (1.5 – 5.5 g·cm) (0.021 – 0.076 oz·inch)
FF	CQ-201B	more than 5.89 mN·m (more than 60 g·cm) (more than 0.83 oz·inch)
REW	CQ-201B	more than 5.89 mN·m (more than 60 g·cm) (more than 0.83 oz·inch)

- **Tape Tension Measurement**

Mode	Tension Meter	Meter Reading
FWD	CQ-403A	more than 100 g (more than 3.53 oz)

SECTION 6
ELECTRICAL ADJUSTMENTS

DECK SECTION　　0 dB=0.775 V

1. Demagnetize the record/playback head with a head demagnetizer.
2. Do not use a magnetized screwdriver for the adjustments.

- **Test Tape**

Tape	Signal	Used for
P-4-A063	6.3 kHz, -10 dB	Azimuth Adjustment

RECORD/PLAYBACK HEAD AZIMUTH ADJUSTMENT

Note: Remove the cover (azimuth) before this adjustment.

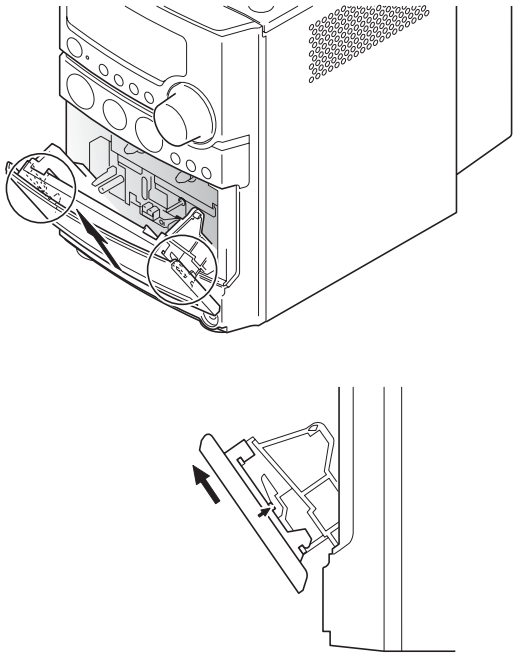

Procedure:

1. Mode: Playback

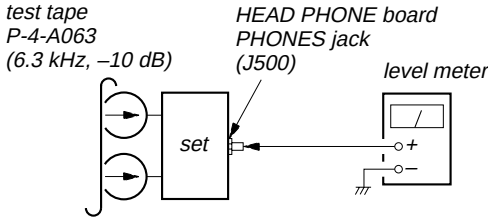

2. Turn the adjustment screw and check output peaks. If the peaks do not match for L-CH and R-CH, turn the adjustment screw so that outputs match within 1dB of peak.

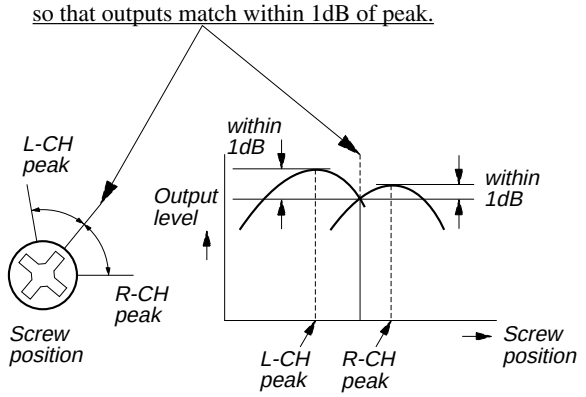

3. Mode: Playback

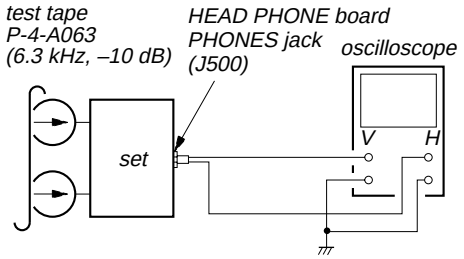

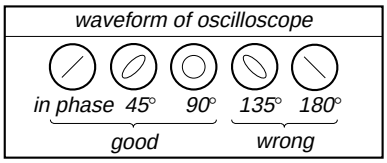

4. After the adjustments, apply suitable locking compound to the pats adjusted.

Adjustment Location: Record/Playback/Erase Head

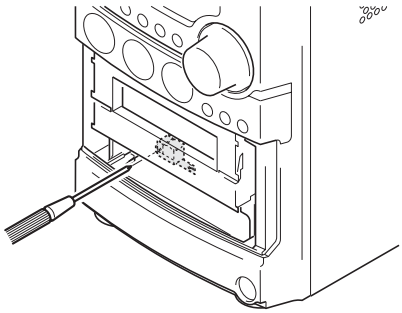

CD SECTION

Note:

1. CD Block is basically constructed to operate without adjustment.
2. Use YEDS-18 disc (3-702-101-01) unless otherwise indicated.
3. Use an oscilloscope with more than 10 MΩ impedance.
4. Clean the object lens by an applicator with neutral detergent when the signal level is low than specified value with the following checks.
5. Check the focus bias check when optical block is replaced.

FOCUS BIAS CHECK

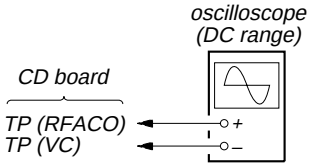

Procedure :

1. Connect the oscilloscope to TP (RFACO) and TP (VC) on the CD board.
2. Insert the disc (YEDS-18). (Part No. : 3-702-101-01)
3. Press the CD ▶II button.
4. Confirm that the oscilloscope waveform is as shown in the figure below. (eye pattern)
   A good eye pattern means that the diamond shape (◊) in the center of the waveform can be clearly distinguished.

- **RF signal reference waveform (eye pattern)**

VOLT/DIV: 0.2 V (with the 10: 1 probe in use.)
TIME/DIV: 500 ns

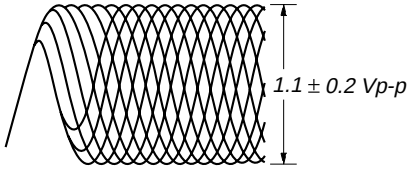

When observing the eye pattern, set the oscilloscope for AC range and raise vertical sensitivity.

Checking Location:

– CD BOARD (Conductor Side) –

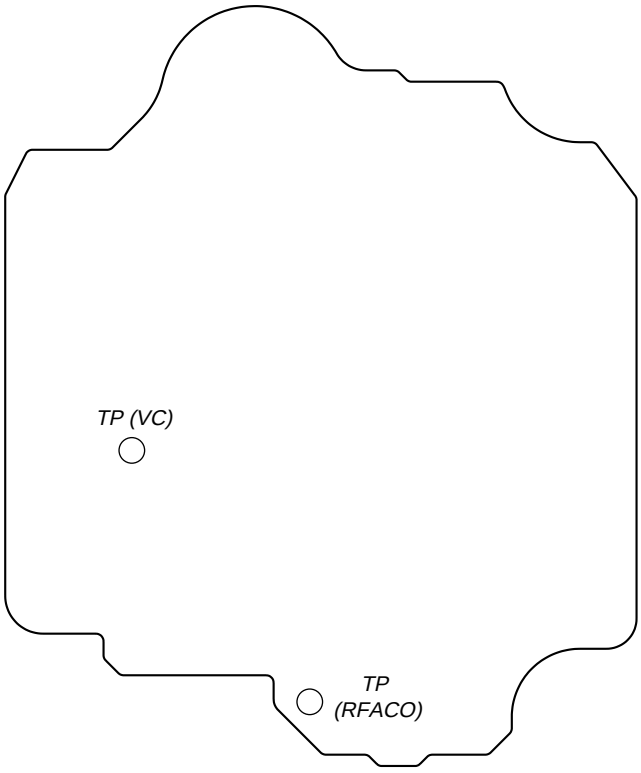

SECTION 7
DIAGRAMS

7-1. BLOCK DIAGRAM – CD SERVO Section –

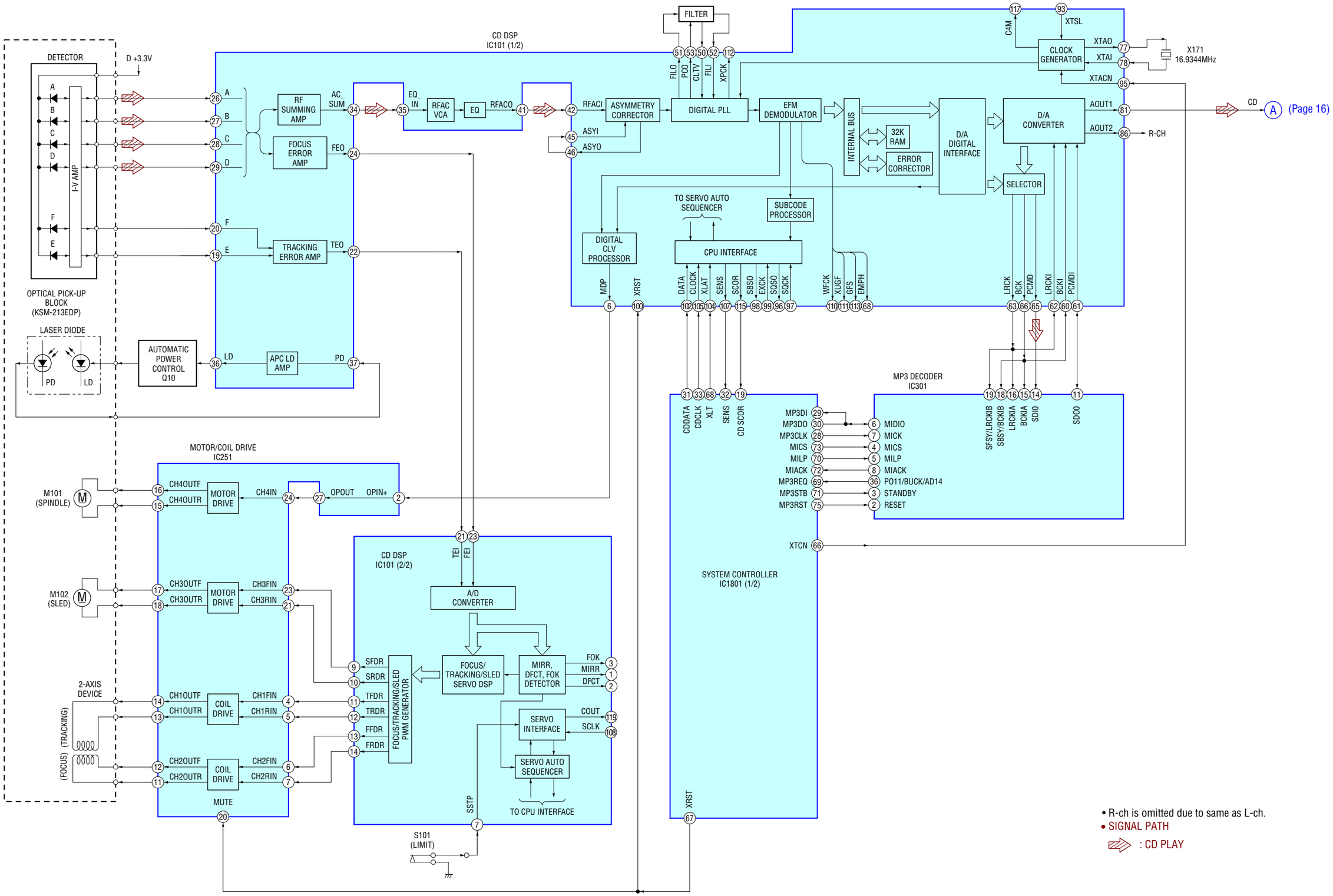

- R-ch is omitted due to same as L-ch.
- SIGNAL PATH
  : CD PLAY

7-2. BLOCK DIAGRAM – MAIN Section –

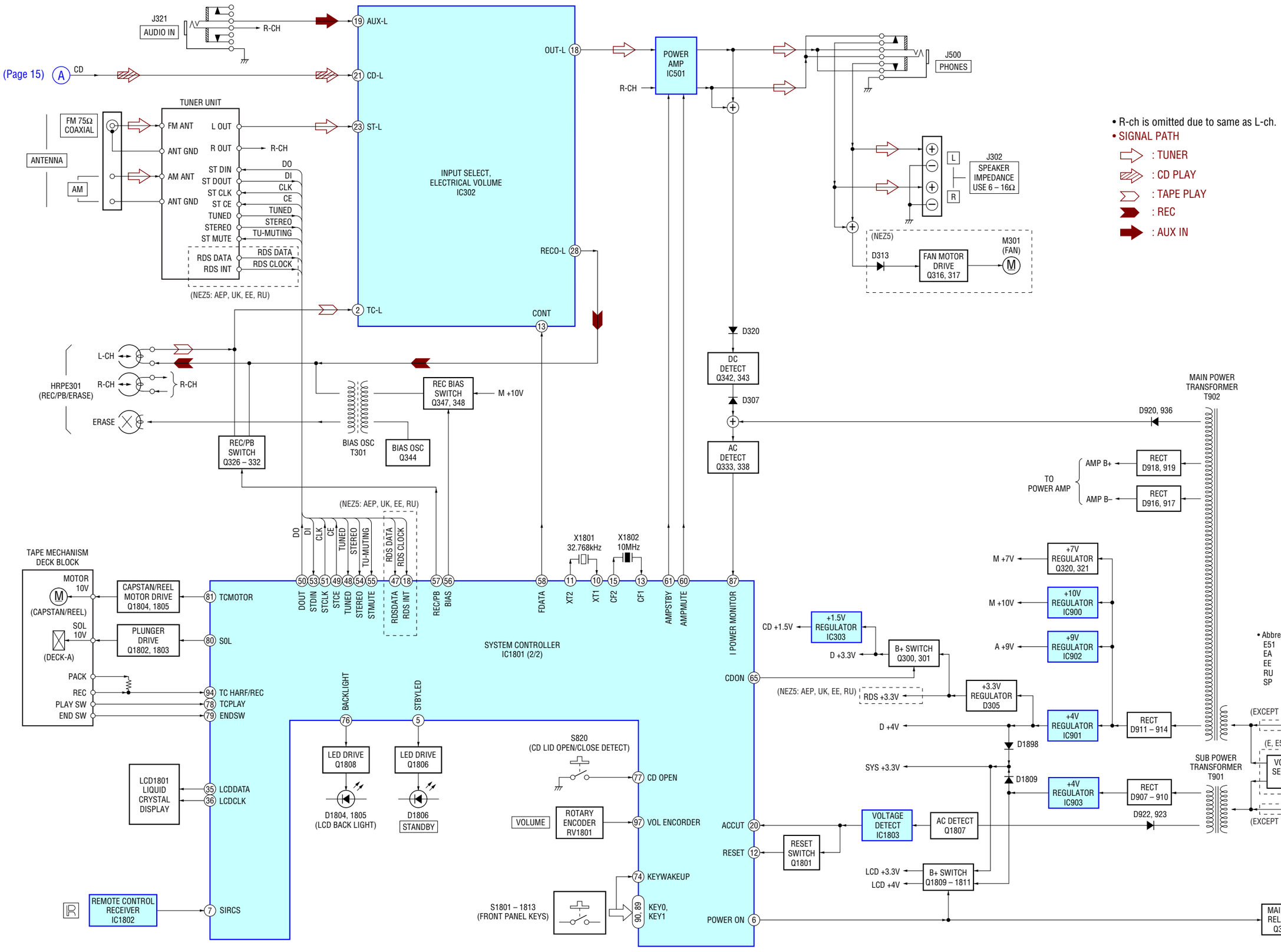

• Note for Printed Wiring Boards and Schematic Diagrams

Note on Printed Wiring Board:

- ○——— : parts extracted from the component side.
- ——— : parts extracted from the conductor side.
- △ : internal component.
- ▬ : Pattern from the side which enables seeing.

(The other layers' patterns are not indicated.)

Caution:	
Pattern face side: (Conductor Side)	Parts on the pattern face side seen from the pattern face are indicated.
Parts face side: (Component Side)	Parts on the parts face side seen from the parts face are indicated.

- Indication of transistor

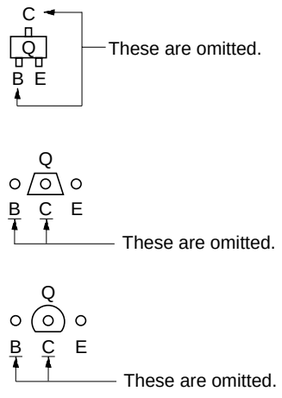

Note on Schematic Diagram:

- All capacitors are in µF unless otherwise noted. (p: pF) 50 WV or less are not indicated except for electrolytics and tantalums.
- All resistors are in Ω and 1/4 W or less unless otherwise specified.
- △ : internal component.
- : nonflammable resistor.
- : fusible resistor.
- ▭ : panel designation.

Note:	**Note:**
The components identified by mark ⚠ or dotted line with mark ⚠ are critical for safety. Replace only with part number specified.	Les composants identifiés par une marque ⚠ sont critiques pour la sécurité. Ne les remplacer que par une pièce portant le numéro spécifié.

- ▬▬ : B+ Line.
- ▬ ▬ ▬ : B– Line.
- Voltages and waveforms are dc with respect to ground under no-signal conditions.
  – CD Board –
  no mark : CD PLAY
  – Other Section –
  no mark : TUNER
  ( ) : CD PLAY
  《 》 : TAPE PLAY
  { } : REC
- Voltages are taken with a VOM (Input impedance 10 MΩ). Voltage variations may be noted due to normal production tolerances.
- Waveforms are taken with a oscilloscope. Voltage variations may be noted due to normal production tolerances.
- Circled numbers refer to waveforms.
- Signal path.
  ⇨ : TUNER
  ⇨ : CD PLAY
  ⇨ : TAPE PLAY
  ⇨ : REC
  ⇨ : AUX IN
- Abbreviation

AR	: Argentina model
AUS	: Australian model
CND	: Canadian model
E51	: Chiliean and Peruvian models
EA	: Saudi Arabia model
EE	: East European model
KR	: Korean model
MX	: Mexican model
RU	: Russian model
SP	: Singapore model
TW	: Taiwan model

• Circuit Boards Location

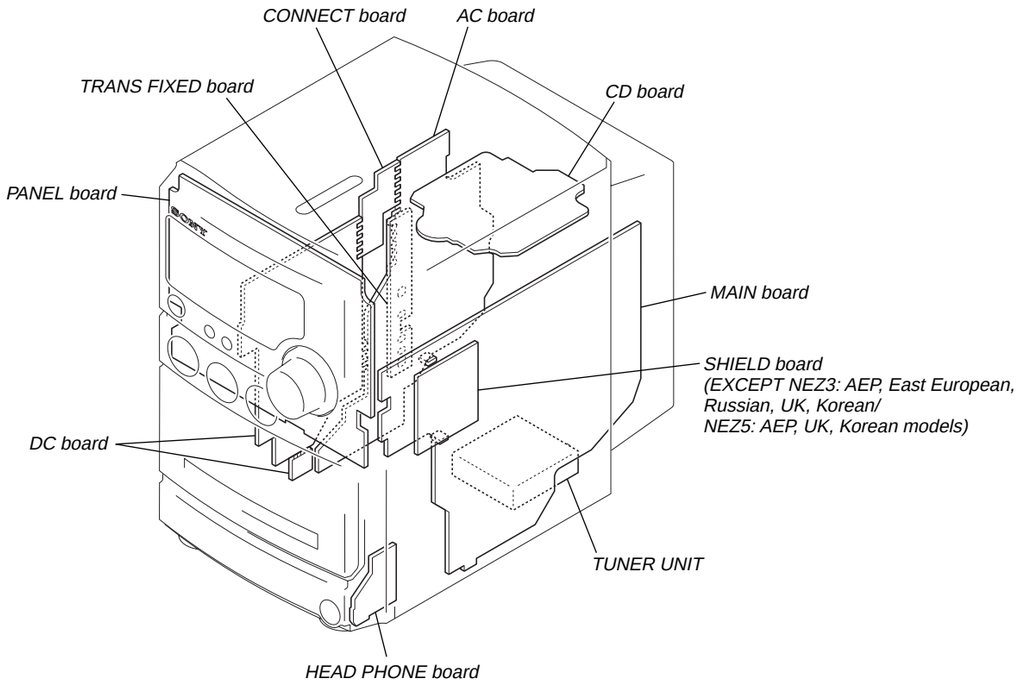

7-3. PRINTED WIRING BOARD – CD Board –

• See page 17 for Circuit Boards Location. : Uses unleaded solder.

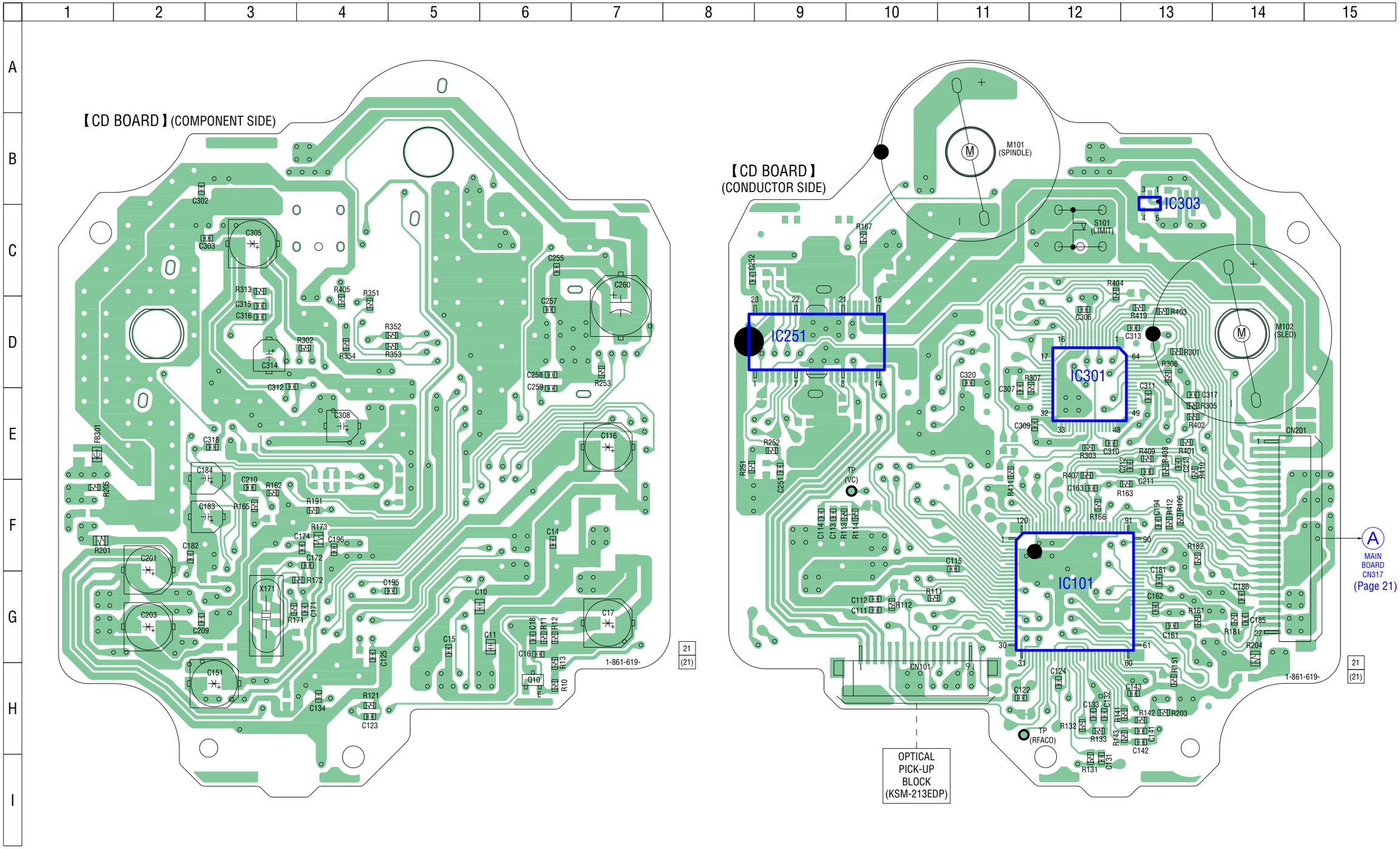

7-4. SCHEMATIC DIAGRAM – CD Board –

• See page 20 for Waveforms. • See page 29 for IC Block Diagrams.

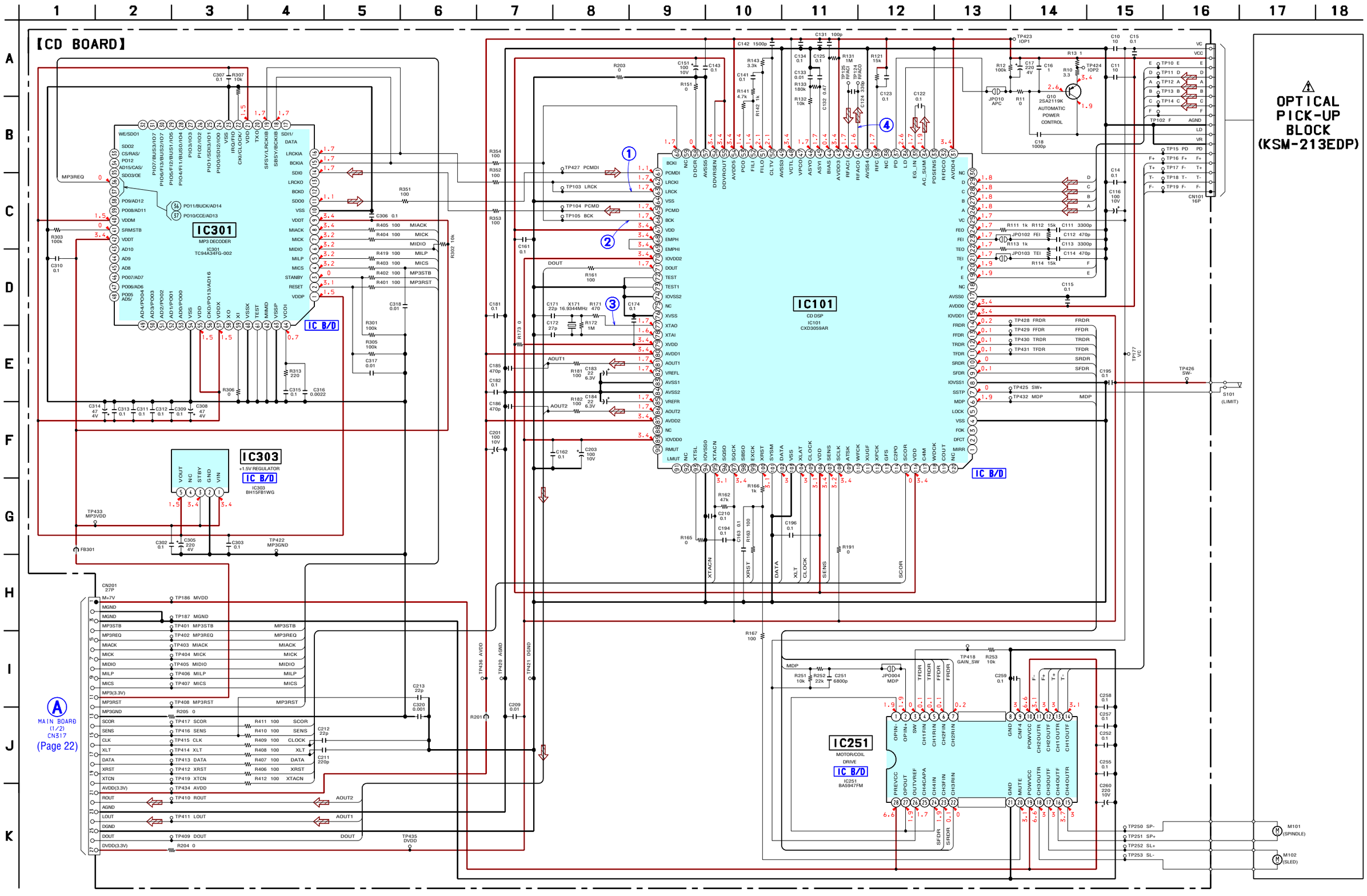

The components identified by mark ⚠ or dotted line with mark ⚠ are critical for safety.
Replace only with part number specified.

Les composants identifiés par une marque ⚠ sont critiques pour la sécurité. Ne les remplacer que par une pièce portant le numéro spécifié.

- **Waveforms**

– CD Board –

① IC101 ⑥③ (LRCK)
(CD PLAY mode)

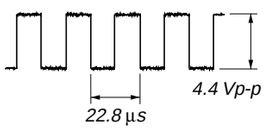

1 V/DIV, 10 µs/DIV

② IC101 ⑥⑥ (BCK)
(CD PLAY mode)

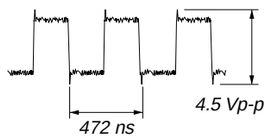

1 V/DIV, 200 ns/DIV

③ IC101 ⑦⑦ (XTAO)
(CD PLAY mode)

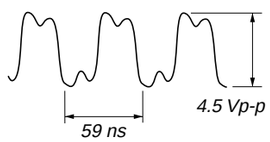

1 V/DIV, 20 ns/DIV

④ IC101 ④① (RFACO)
(CD PLAY mode)

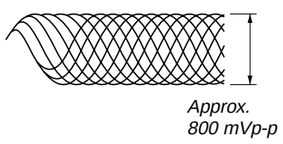

200 mV/DIV, 500 ns/DIV

– MAIN Board –

⑪ T301 ④
(REC mode)

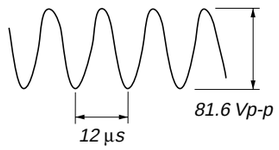

50 V/DIV, 5 µs/DIV

⑫ Q344 (Collector)
(REC mode)

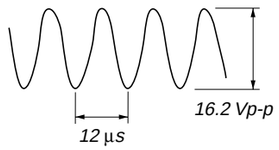

5 V/DIV, 5 µs/DIV

– PANEL Board –

㉑ IC1801 ⑪ (XT2)

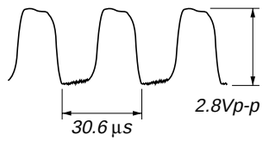

1 V/DIV, 10 µs/DIV

㉒ IC1801 ⑮ (CF2)

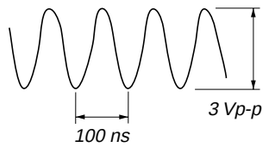

1 V/DIV, 50 ns/DIV

7-5. PRINTED WIRING BOARDS – MAIN Section –

• See page 17 for Circuit Boards Location. : Uses unleaded solder.

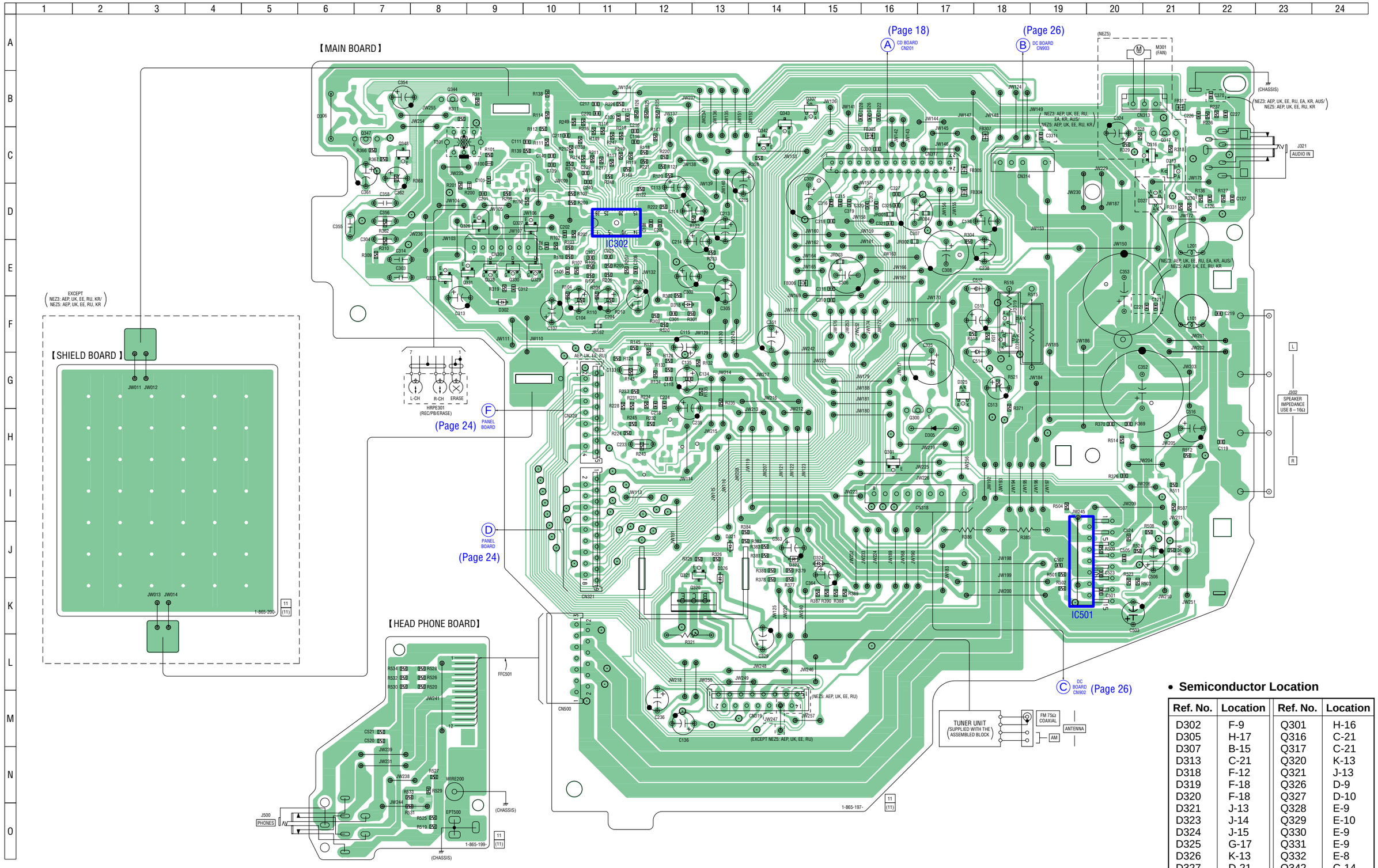

• **Semiconductor Location**

Ref. No.	Location	Ref. No.	Location
D302	F-9	Q301	H-16
D305	H-17	Q316	C-21
D307	B-15	Q317	C-21
D313	C-21	Q320	K-13
D318	F-12	Q321	J-13
D319	F-18	Q326	D-9
D320	F-18	Q327	D-10
D321	J-13	Q328	E-9
D323	J-14	Q329	E-10
D324	J-15	Q330	E-9
D325	G-17	Q331	E-9
D326	K-13	Q332	E-8
D327	D-21	Q342	C-14
		Q343	B-14
IC302	D-11	Q344	B-8
IC501	J-19	Q347	C-7
		Q348	C-7
Q300	H-17		

7-6. SCHEMATIC DIAGRAM – MAIN Section (1/2) –

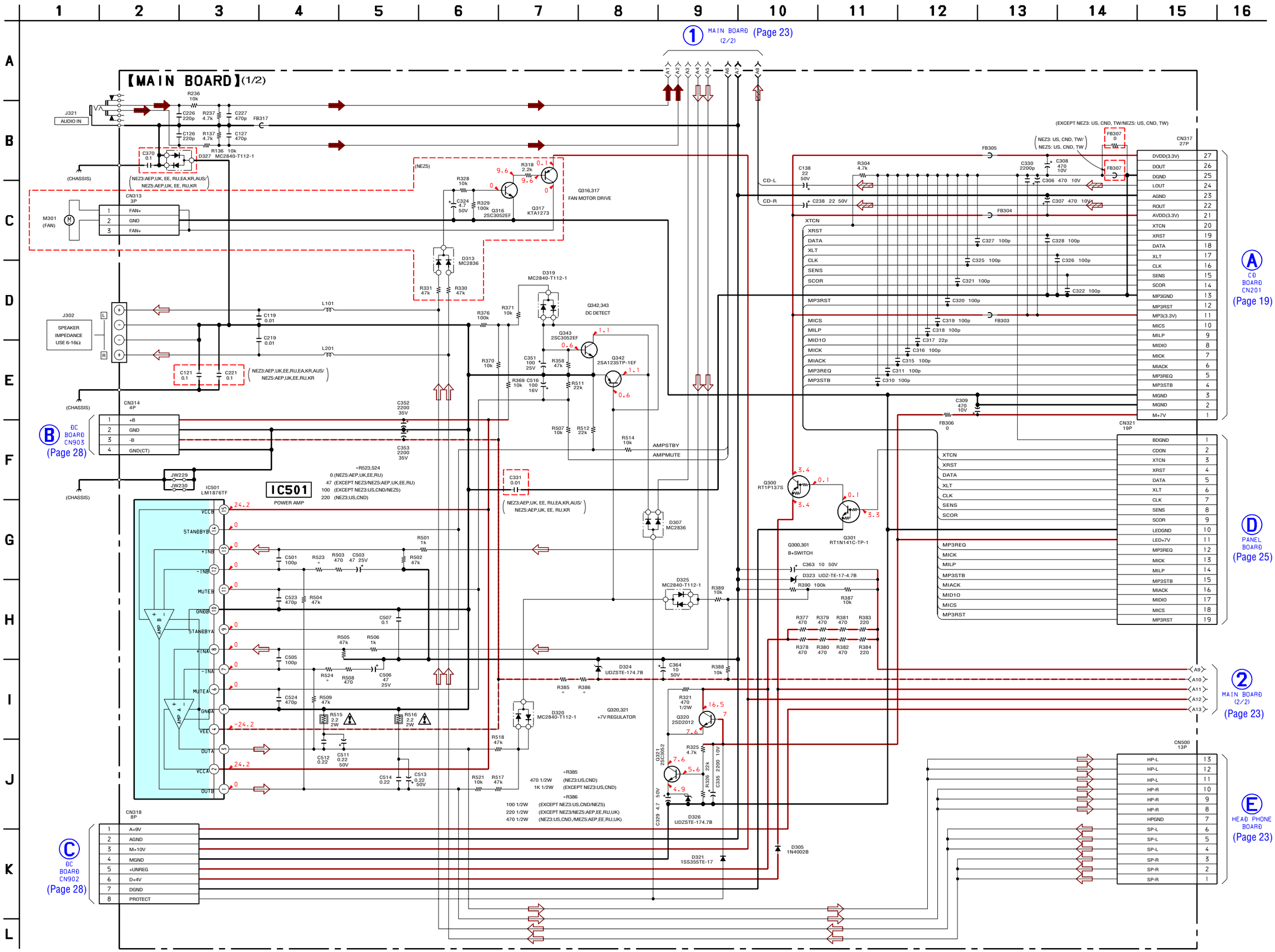

7-7. SCHEMATIC DIAGRAM – MAIN Section (2/2) –

• See page 20 for Waveforms. • See page 29 for IC Block Diagrams.

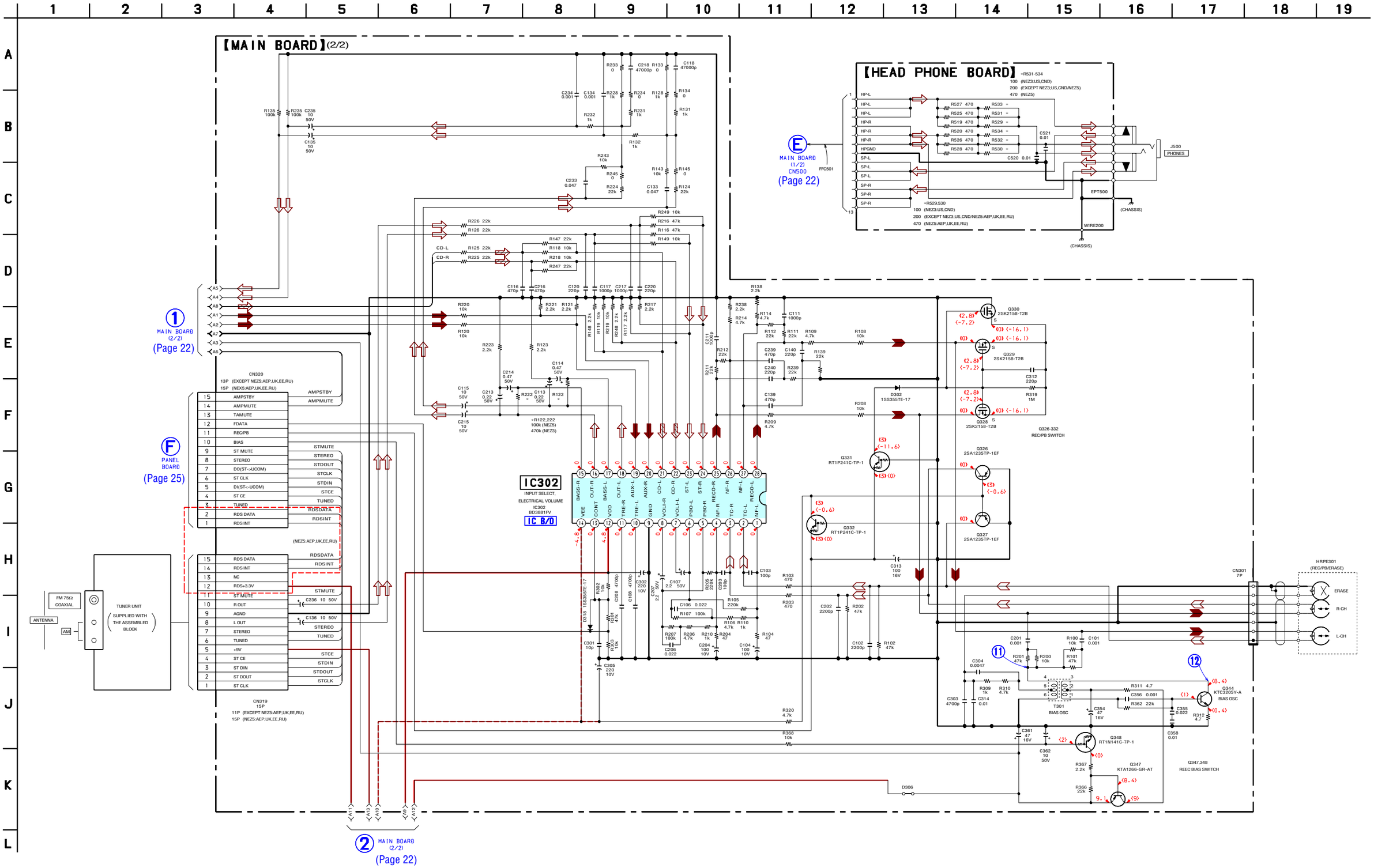

7-8. PRINTED WIRING BOARD – PANEL Board –

• See page 17 for Circuit Boards Location. : Uses unleaded solder.

• **Semiconductor Location**

Ref. No.	Location
D1801	J-8
D1804	D-5
D1805	D-5
D1806	G-11
D1808	H-3
D1809	G-13
D1898	F-13
D1899	G-8
IC1801	E-9
IC1802	F-12
IC1803	H-3
Q1801	G-3
Q1802	J-7
Q1803	J-6
Q1804	I-7
Q1805	I-6
Q1806	G-10
Q1807	C-12
Q1808	E-5
Q1809	C-11
Q1810	C-12
Q1811	C-12

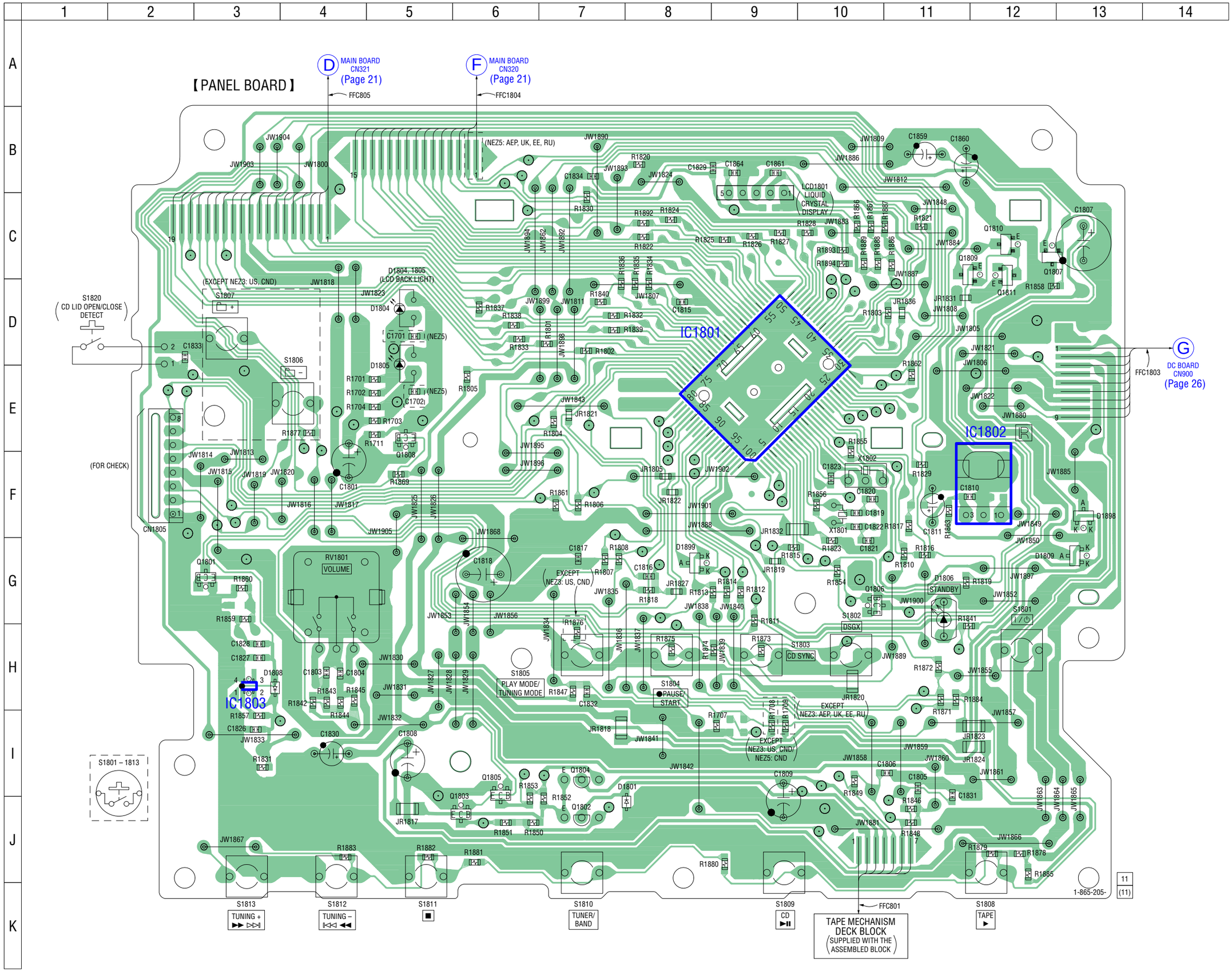

7-9. SCHEMATIC DIAGRAM – PANEL Board –

• See page 20 for Waveforms. • See page 33 for IC Pin Function Description.

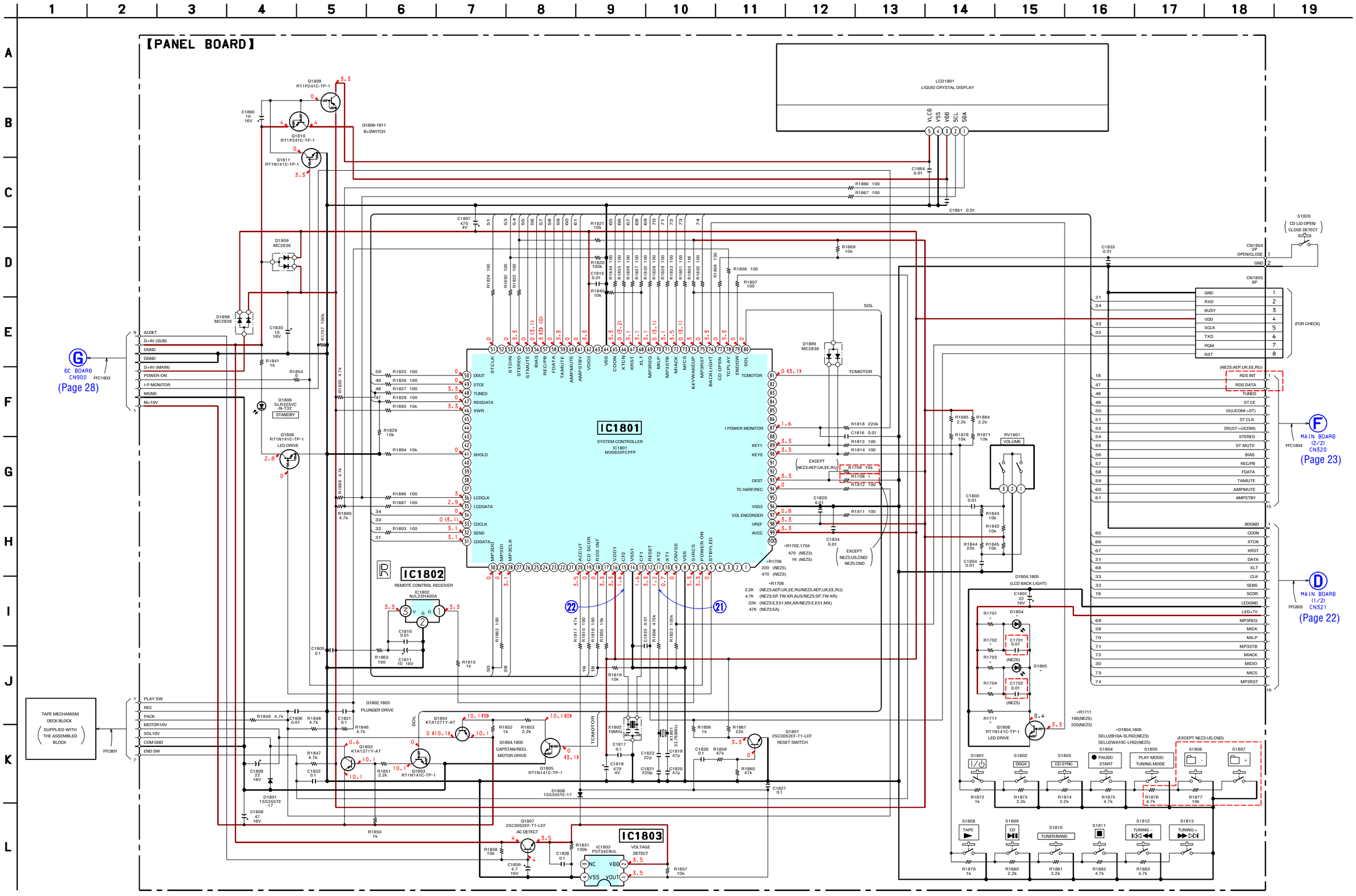

7-10. PRINTED WIRING BOARDS – DC Section –

• See page 17 for Circuit Boards Location. : Uses unleaded solder.

• **Semiconductor Location**

Ref. No.	Location
D322	J-5
D911	G-4
D912	G-4
D913	G-5
D914	G-4
D916	F-10
D917	E-10
D918	F-10
D919	G-10
D920	F-6
D926	G-8
D927	G-7
D928	H-7
D936	G-5
IC900	H-1
IC901	I-8
IC902	G-6
IC903	K-12
Q311	J-7
Q315	J-6
Q333	J-5
Q338	J-6

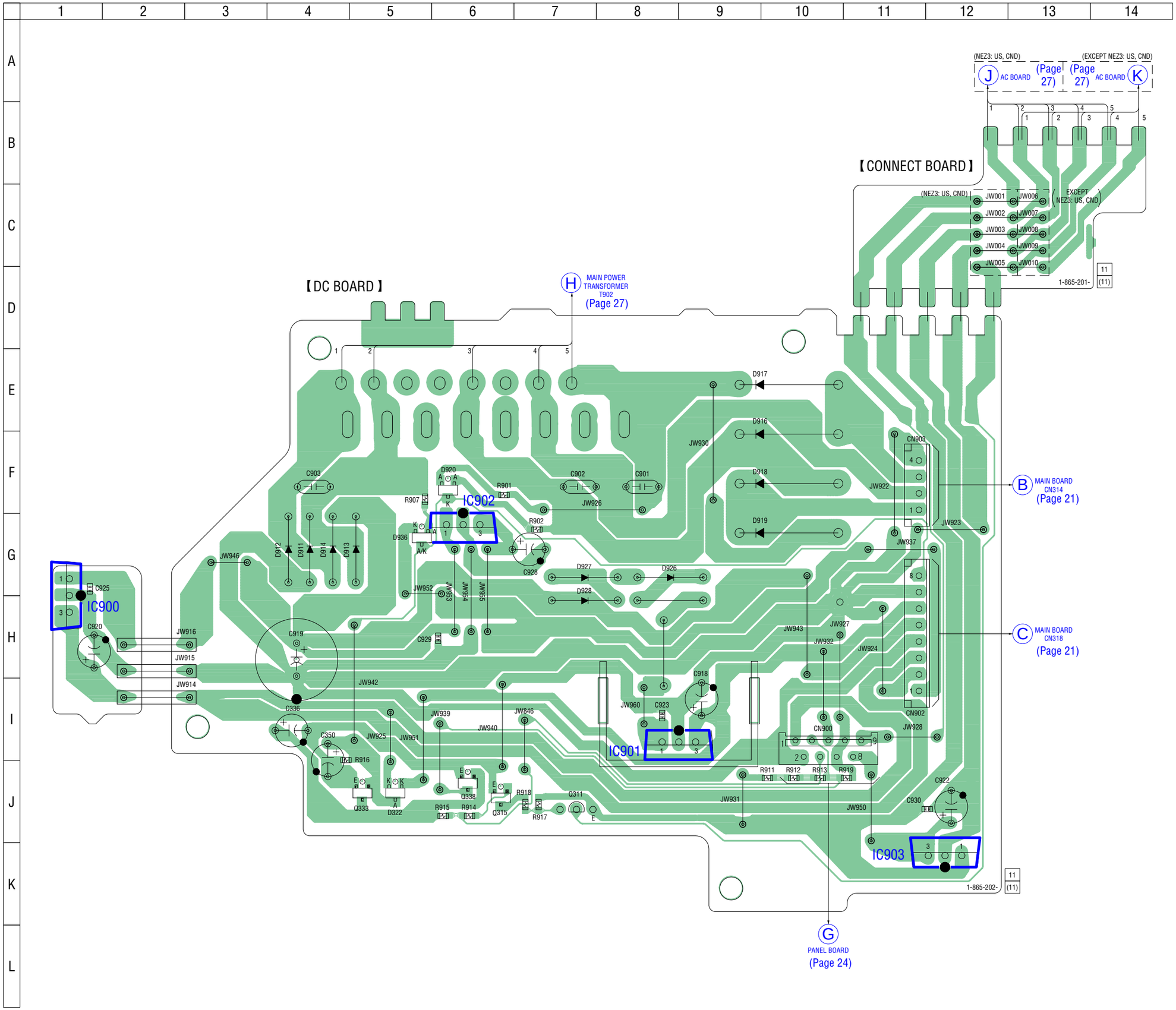

7-11. PRINTED WIRING BOARD – AC Board –

• See page 17 for Circuit Boards Location. : Uses unleaded solder.

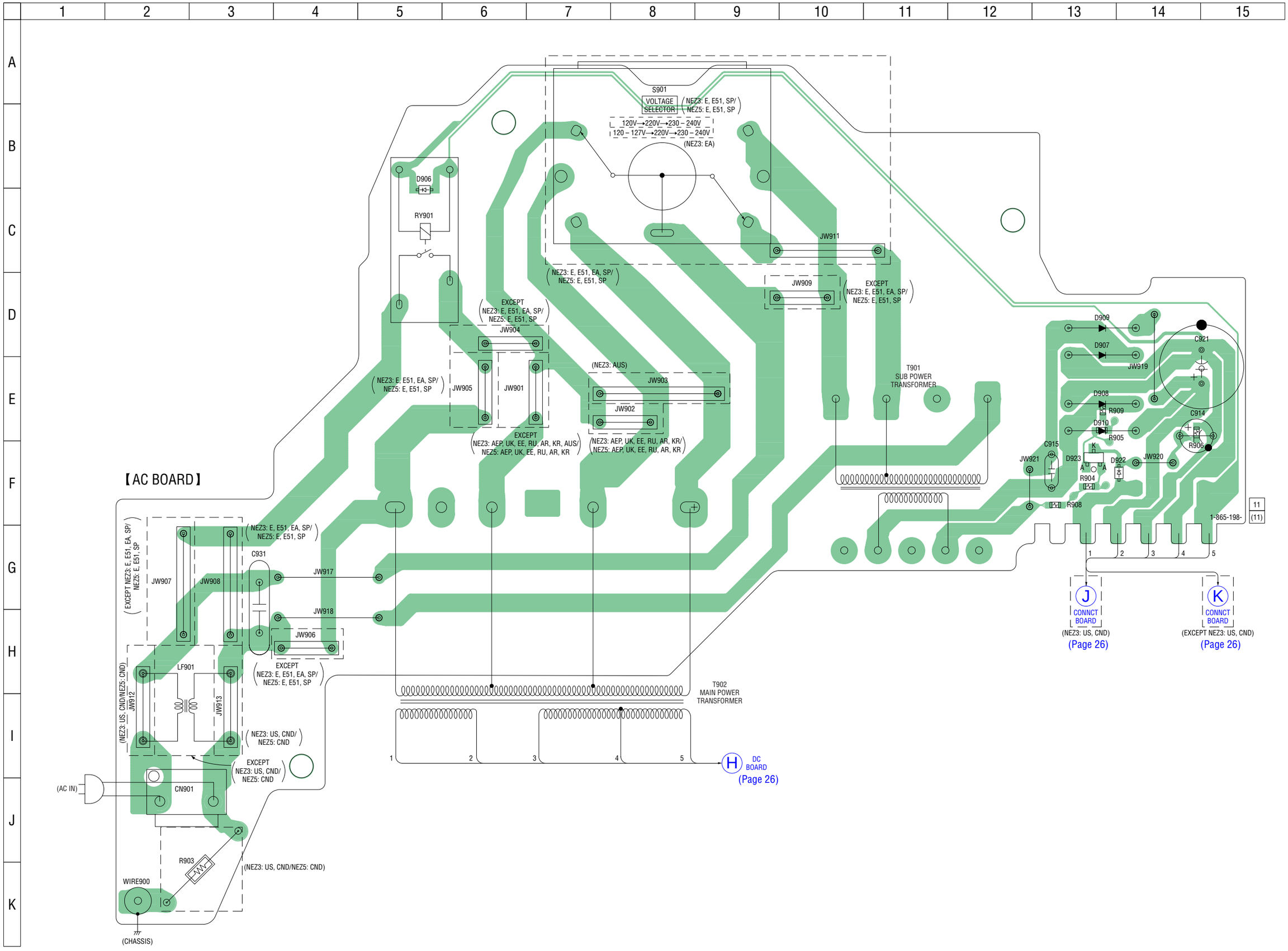

7-12. SCHEMATIC DIAGRAM – POWER SUPPLY Section –

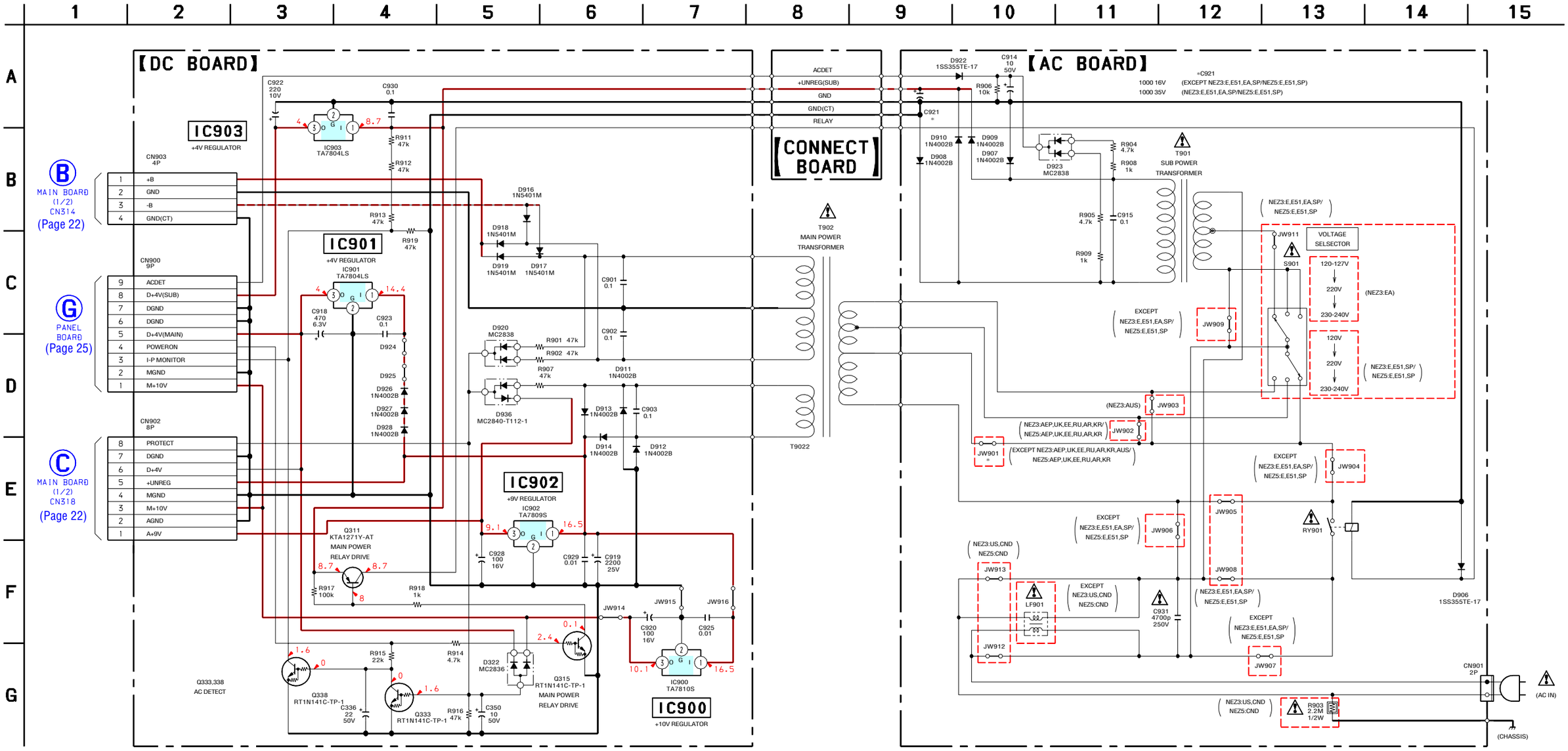

The components identified by mark ⚠ or dotted line with mark ⚠ are critical for safety. Replace only with part number specified.	Les composants identifiés par une marque ⚠ sont critiques pour la sécurité. Ne les remplacer que par une pièce portant le numéro spécifié.

- **IC Block Diagrams**

– CD Board –

IC101 CXD3059AR

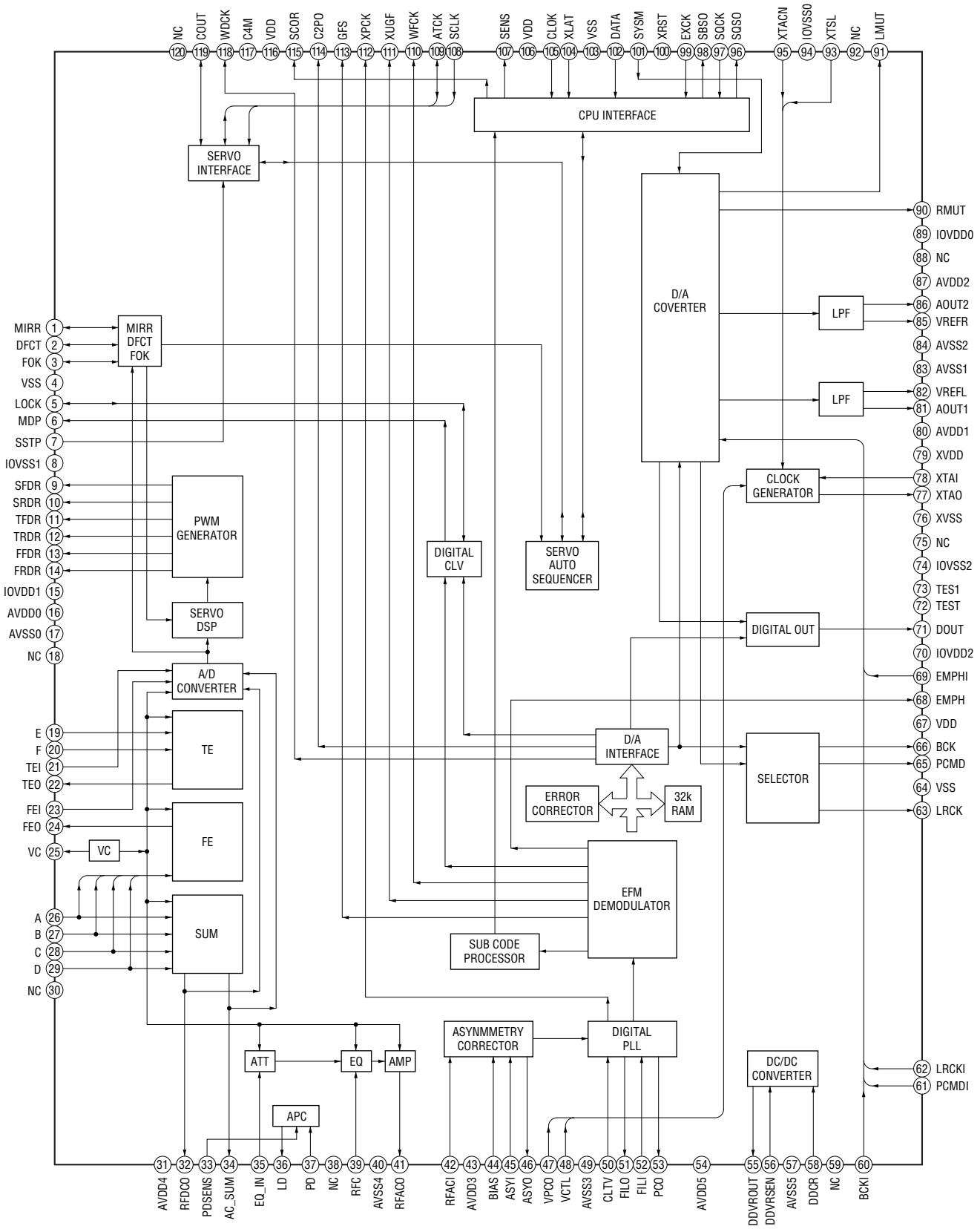

IC251 BA5947FM-E2

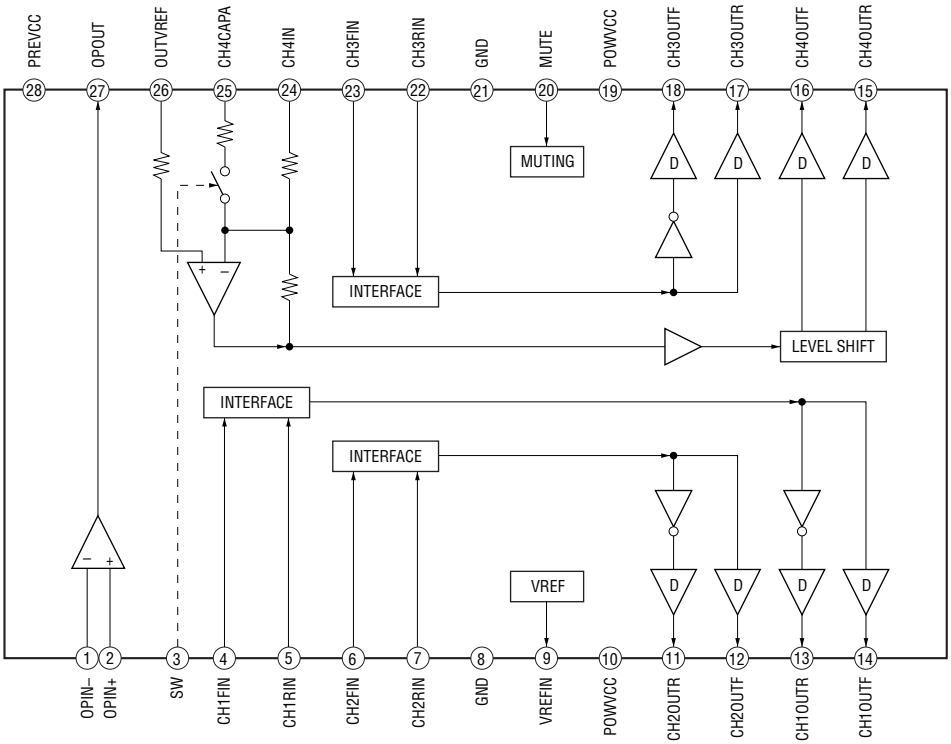

IC301 TC94A34FG-002

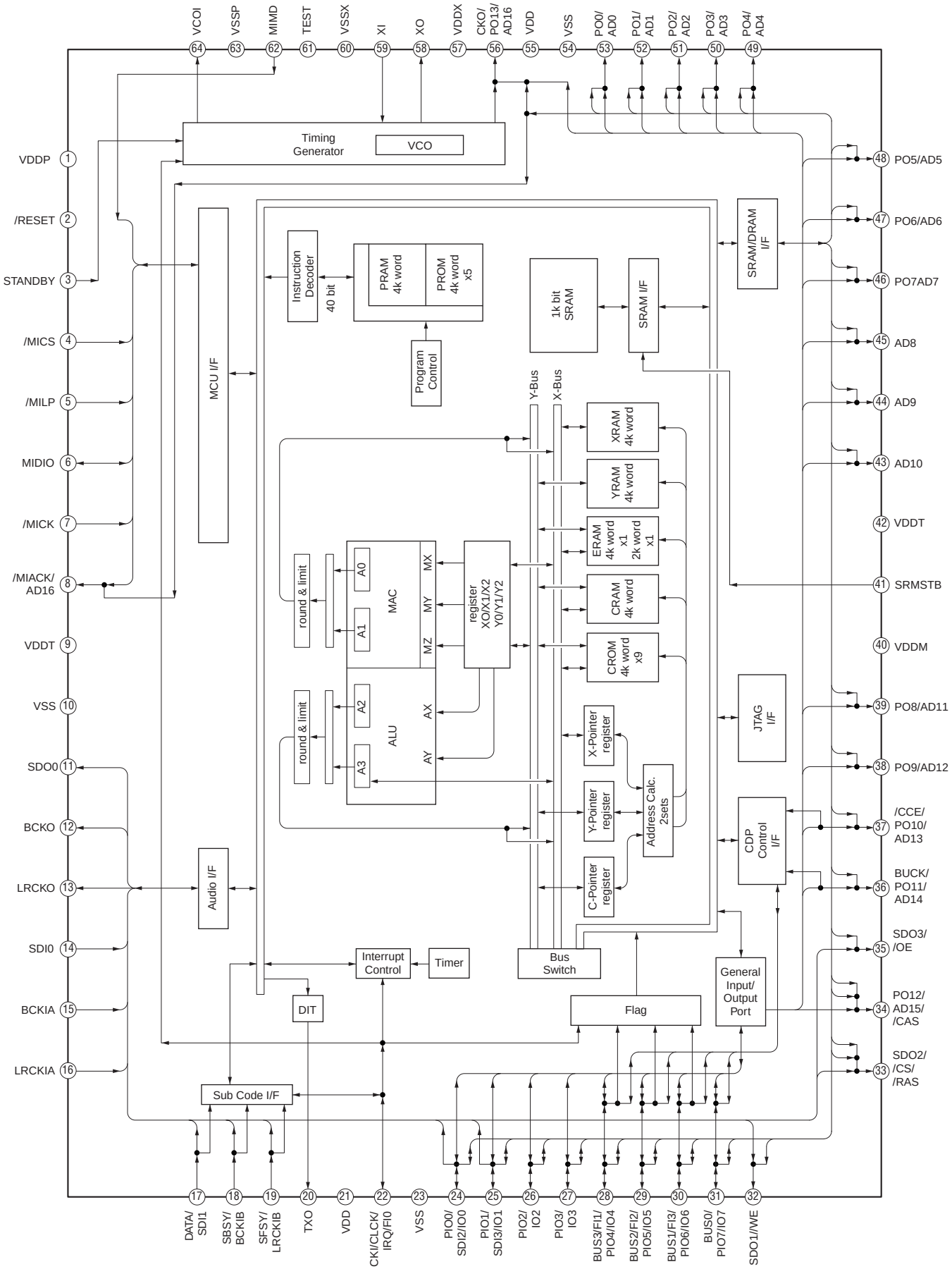

IC303 BH15FB1WG

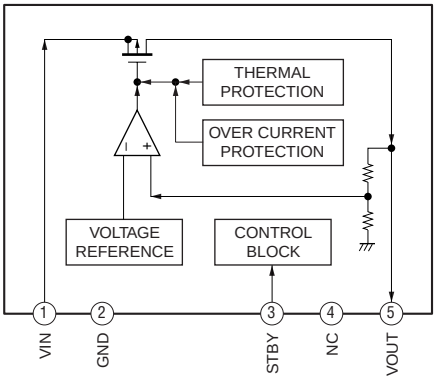

– MAIN Board –

IC302 BD3881FV

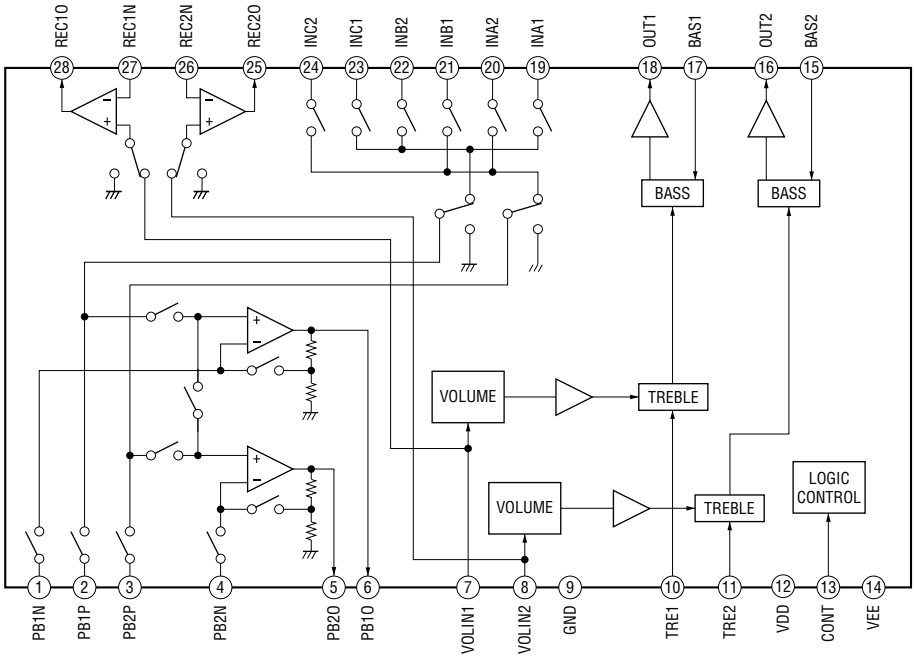

- **IC PIN FUNCTION DESCRIPITION**

PANEL BOARD IC1801 M30620FCPFP (SYSTEM CONTROLLER)

Pin No.	Pin Name	I/O	Description
1 to 4	-	-	Not used
5	STBYLED	O	LED drive signal output terminal for STANDBY indicate
6	POWER ON	O	Power relay drive signal output terminal "H": on
7	SIRCS	I	Remote control signal input from the remote control receiver
8	VSS	-	Ground terminal
9	CNVSS	-	Not used
10	XT1	I	Sub system clock input terminal (32.768 kHz)
11	XT2	O	Sub system clock output terminal (32.768 kHz)
12	RESET	I	Reset signal input from the reset switch "L": reset For several hundreds msec. after the power supply rises, "L" is input, then it changes to "H"
13	CF1	I	Main system clock input terminal (10 MHz)
14	VSS1	-	Ground terminal
15	CF2	O	Main system clock output terminal (10 MHz)
16	VDD1	-	Power supply terminal (+3.3V)
17	-	-	Not used
18	RDS INT	I	RDS serial data transfer clock signal input from the tuner unit (NEZ5: AEP, East European, Russian, UK models only)
19	CD SCOR	I	Subcode sync (S0+S1) detection signal input from the CD DSP
20	ACCUT	I	Power down detection signal input terminal "L": power down, normally : "H"
21 to 27	-	-	Not used
28	MP3CLK	O	Serial data transfer clock signal output to the MP3 decoder
29	MP3DI	I	Serial data input from the MP3 decoder
30	MP3DO	O	Serial data output to the MP3 decoder
31	CDDATA	O	Serial data output to the CD DSP
32	SENS	I	Internal status (SENSE) signal input from the CD DSP
33	CDCLK	O	Serial data transfer clock signal output to the CD DSP
34	-	-	Not used
35	LCDDATA	O	Serial data output to the liquid crystal display
36	LCDCLK	O	Serial data transfer clock signal output to the liquid crystal display
37 to 40	-	-	Not used
41	XHOLD	-	Not used
42 to 45	-	-	Not used
46	XWR	-	Not used
47	RDSDATA	I	RDS serial data input from the tuner unit (NEZ5: AEP, East European, Russian, UK models only)
48	TUNED	I	Tuning detection signal input from the tuner unit
49	STCE	O	Chip enable signal output to the tuner unit
50	DOUT	O	Serial data output to the tuner unit
51	STCLK	O	serial data transfer clock signal output to the tuner unit
52	-	-	Not used
53	STDIN	I	Serial data input from the tuner unit
54	STEREO	I	FM stereo detection signal input from the tuner unit
55	STMUTE	O	Tuner muting on/off control signal output to the tuner unit
56	BIAS	O	Recording bias on/off selection signal output terminal "H": bias on, "L": bias off
57	REC/PB	O	Recording/playback selection signal output terminal "H": playback mode, "L": recording mode
58	FDATA	O	Serial data output to the electrical volume

Pin No.	Pin Name	I/O	Description
59	TAMUTE	O	Line muting on/off control signal output terminal Not used
61	AMPSTBY	O	Standby control signal output to the power amplifier
62	VDD2	-	Power supply terminal (+3.3V)
63	-	-	Not used
64	VSS	-	Ground terminal
65	CDON	O	Power on/off control signal output for the CD mechanism section
66	XTCN	O	Oscillation circuit control signal output to the CD DSP "H": auto oscillation, "L": oscillation off
67	XRST	O	Reset signal output to the CD DSP
68	XLT	O	Serial data latch pulse output to the CD DSP
69	MP3REQ	I	Request signal input from the MP3 decoder
70	MILP	O	Serial data latch pulse output to the MP3 decoder
71	MP3STB	O	Standby control signal output to the MP3 decoder
72	MIACK	I	Acknowledge signal input from the MP3 decoder
73	MICS	O	Chip select signal output to the MP3 decoder
74	KEYWAKEUP	I	Key interruption processing start signal input terminal
75	MP3RST	O	Reset signal output to the MP3 decoder
76	BACKLIGHT	O	LED drive signal output terminal for LCD back light
77	CD OPEN	I	CD lid open/close detection switch input terminal
78	TCPLAY	I	PLAY switch signal input from the tape mechanism deck
79	ENDSW	I	END switch signal input from the tape mechanism deck
80	SOL	O	Trigger plunger on/off control signal output terminal "H": plunger on
81	TCMOTOR	O	Capstan/reel motor on/off control signal output terminal "H": motor on
82 to 86	-	-	Not used
87	I POWER MONITOR	I	Power monitor input terminal
88	-	-	Not used
89, 90	KEY1, KEY0	I	Front panel key input terminal (A/D input)
91, 92	-	-	Not used
93	DEST	I	Model destination setting terminal
94	TC HARF/REC	I	Recording-proof claw (forward/reverse) detect switch and cassette in detect switch input terminal
95	-	-	Not used
96	VSS3	-	Ground terminal
97	VOL ENCORDER	I	Dial pulse input of the rotary encoder (for VOLUME control)
98	VREF	I	Reference voltage (+3.3V) input terminal
99	AVCC	-	Power supply terminal (+3.3V)
100	-	-	Not used

SECTION 8
EXPLODED VIEWS

NOTE:

- -XX and -X mean standardized parts, so they may have some difference from the original one.
- Color Indication of Appearance Parts
  Example:
  KNOB, BALANCE (WHITE) . . . (RED)
  ↑ Parts Color ↑ Cabinet's Color
- Abbreviation
  AR : Argentina model E51 : Chirean and Peruvian model KR : Korean model SP : Singapore model
  AUS : Australian model EA : Saudi Arabia model MX : Mexican model TW : Taiwan model
  CND : Canadian model EE : East European model RU : Russian model
- Items marked "*" are not stocked since they are seldom required for routine service. Some delay should be anticipated when ordering these items.
- The mechanical parts with no reference number in the exploded views are not supplied.
- Accessories are given in the last of the electrical parts list.

The components identified by mark ⚠ or dotted line with mark ⚠ are critical for safety.
Replace only with part number specified.

Les composants identifiés par une marque ⚠ sont critiquens pour la sécurité.
Ne les remplacer que par une pièce portant le numéro spécifié.

8-1. CABINET SECTION

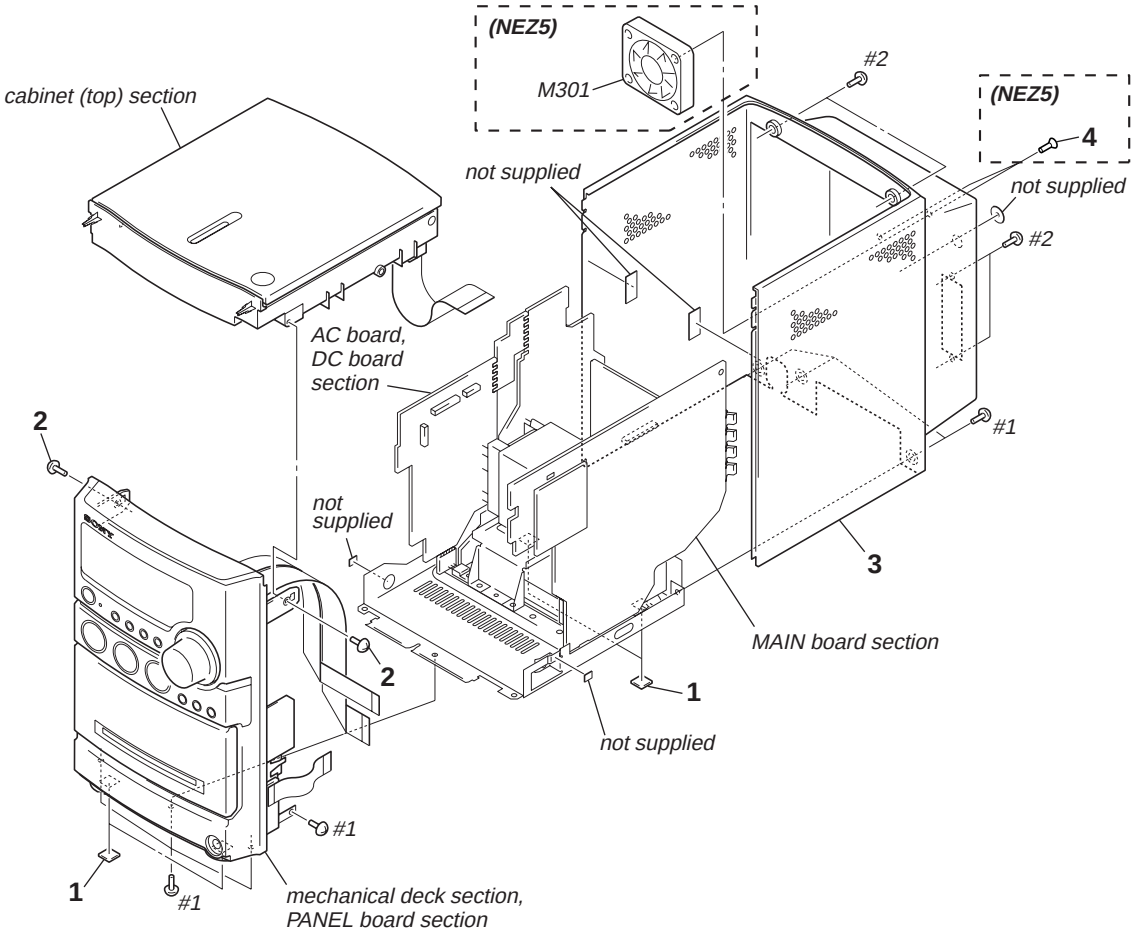

Ref. No.	Part No.	Description	Remark
1	4-247-752-01	FOOT, RUBBER	
2	4-951-620-01	SCREW (2.6X8), +BVTP	
3	2-581-397-02	CABINET (NEZ3: US)	
3	2-581-397-12	CABINET (NEZ3: CND)	
3	2-581-399-02	CABINET (NEZ3: AEP, UK, EE, RU, MX, TW, AR, KR, AUS)	
3	2-581-399-12	CABINET (NEZ3: E, E51, SP)	
3	2-581-399-22	CABINET (NEZ3: EA)	
3	2-581-402-22	CABINET (SILVER) (NEZ5: CND, AEP, UK, EE, RU, MX, TW, AR, KR)	
3	2-581-402-32	CABINET (WHITE) (NEZ5: KR)	
3	2-581-402-42	CABINET (SILVER) (NEZ5: E, E51, SP)	
3	2-581-402-52	CABINET (WHITE) (NEZ5: SP)	
4	4-671-016-01	SCREW (FAN) (NEZ5)	
M301	1-787-103-11	FAN, DC (NEZ5)	
#1	7-685-646-79	SCREW +BVTP 3X8 TYPE2 N-S	
#2	7-685-647-79	SCREW +BVTP 3X10 TYPE2 N-S	

8-2. MECHANICAL DECK SECTION

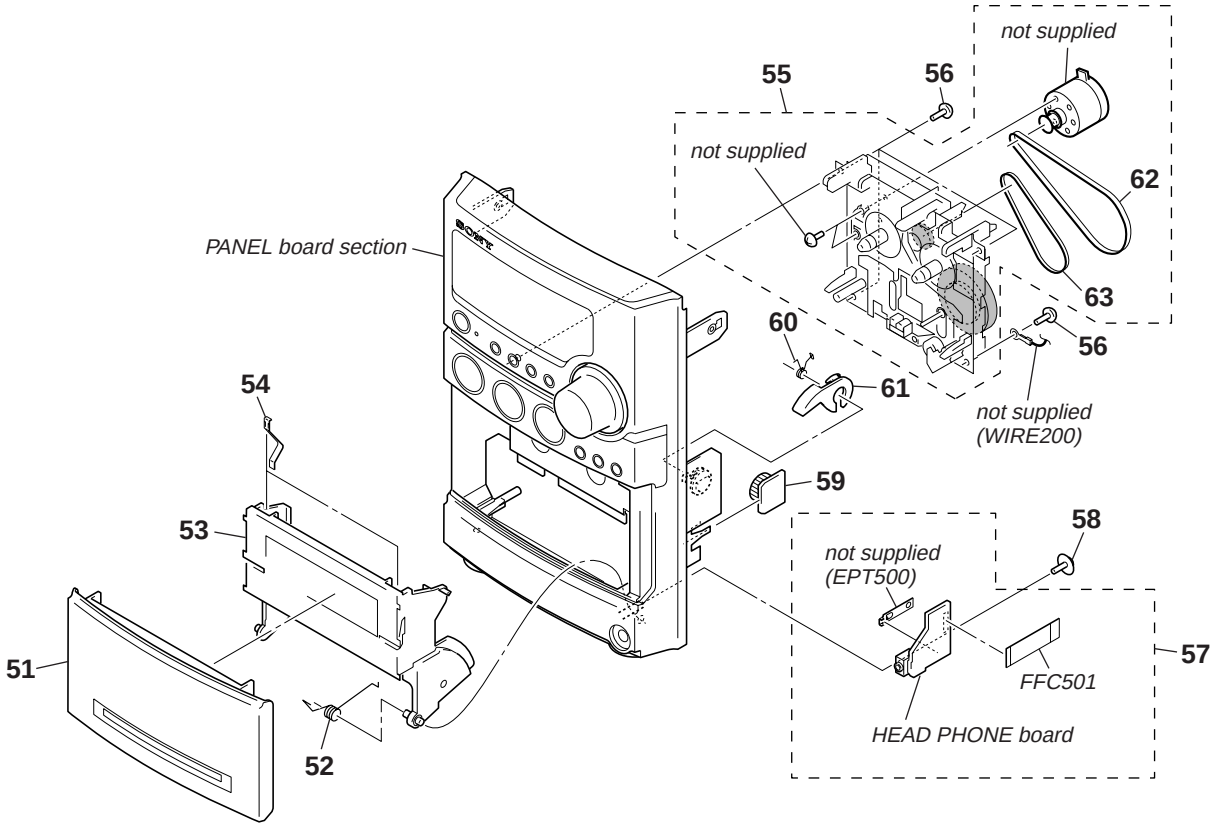

Ref. No.	Part No.	Description	Remark
51	X-2048-718-1	LID ASSY, CASSETTE (SILVER)	
51	X-2050-327-1	LID ASSY, CASSETTE (WHITE) (NEZ5)	
52	4-245-034-01	SPRING (CASSETTE)	
53	2-581-395-01	HOLDER (CASSETTE)	
54	4-238-631-01	TAPE SPRING	
55	1-796-352-71	DECK, MECHANICAL (CMAL5Z231)	
56	4-951-620-01	SCREW (2.6X8), +BVTP	
57	A-1090-813-A	HEAD PHONE BOARD, COMPLETE	(NEZ3: US, CND)
57	A-1090-905-A	HEAD PHONE BOARD, COMPLETE (NEZ5: CND)	
57	A-1095-915-A	HEAD PHONE BOARD, COMPLETE	(NEZ3: AEP, UK, EE, RU, KR)
57	A-1095-924-A	HEAD PHONE BOARD, COMPLETE	(NEZ3: E, E51, EA, MX, SP, TW, AR, AUS)
57	A-1095-934-A	HEAD PHONE BOARD, COMPLETE	(NEZ5: AEP, UK, EE, RU)
57	A-1095-972-A	HEAD PHONE BOARD, COMPLETE	(NEZ5: E, E51, MX, TW, AR, SP)
57	A-1102-061-A	HEAD PHONE BOARD, COMPLETE (NEZ5: KR)	
58	4-933-134-11	SCREW (+PTPWH M2.6X8)	
59	4-224-104-41	DAMPER	
60	4-231-841-01	SPRING (HEART CAM-B)	
61	4-231-825-01	CAM (B), HEART	
62	2-655-725-01	BELT (MAIN)	
63	2-655-726-01	BELT (MO), F/R	
FFC501	1-830-584-12	WIRE (FLAT TYPE) (13 CORE)	

8-3. PANEL BOARD SECTION

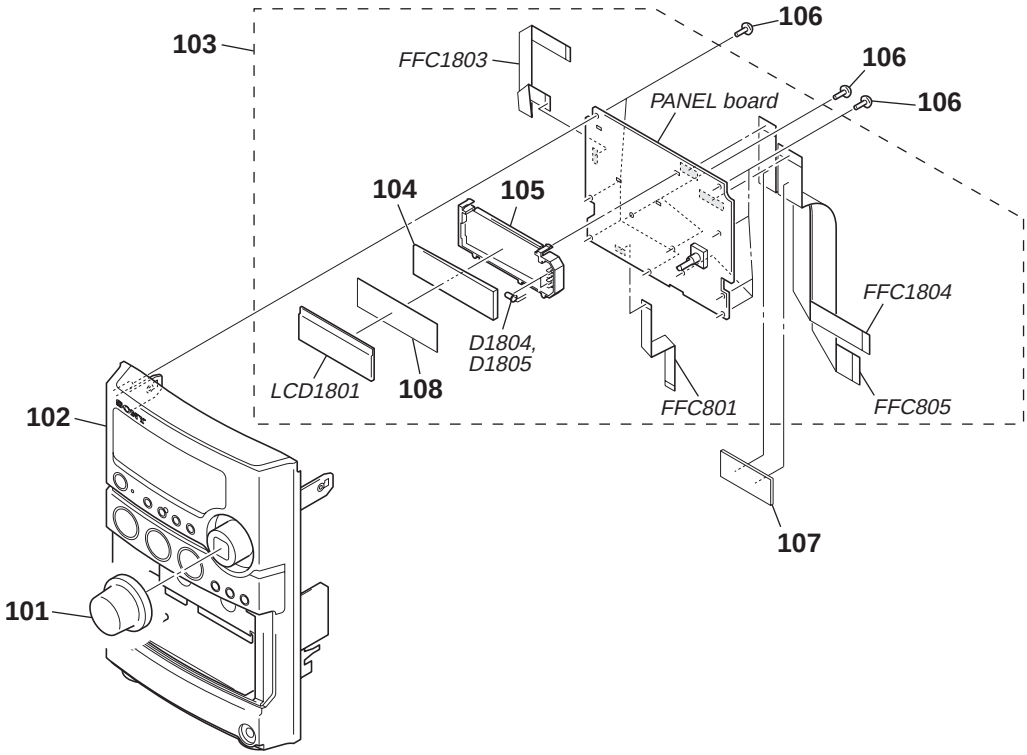

Ref. No.	Part No.	Description	Remark
101	2-581-385-02	KNOB (VOL) (NEZ3)	
101	2-581-385-11	KNOB (VOL) (NEZ5)	
102	X-2048-717-1	PANEL ASSY, FRONT (NEZ3: US)	
102	X-2048-755-1	PANEL ASSY, FRONT (NEZ3: AEP, UK, E, E51, EA, EE, RU, MX, SP, TW, AR, KR, AUS)	
102	X-2050-120-1	PANEL ASSY, FRONT (SILVER) (NEZ5: AEP, UK, EE, RU)	
102	X-2050-205-1	PANEL ASSY, FRONT (SILVER) (NEZ5: CND, E, E51, MX, TW, AR, SP, KR)	
102	X-2050-273-1	PANEL ASSY, FRONT (SILVER) (NEZ3: CND)	
102	X-2050-326-1	PANEL ASSY, FRONT (WHITE) (NEZ5: SP, KR)	
103	A-1095-891-A	PANEL BOARD, COMPLETE (NEZ3: US, CND)	
103	A-1095-895-A	PANEL BOARD, COMPLETE (NEZ3: AEP, UK, EE, RU)	
103	A-1095-922-A	PANEL BOARD, COMPLETE (NEZ3: SP, TW, KR, AUS)	
103	A-1095-933-A	PANEL BOARD, COMPLETE (NEZ5: AEP, UK, EE, RU)	
103	A-1095-971-A	PANEL BOARD, COMPLETE (for SILVER) (NEZ5: SP, TW, KR)	
103	A-1098-688-A	PANEL BOARD, COMPLETE (NEZ3: E, E51, MX, AR)	
103	A-1098-754-A	PANEL BOARD, COMPLETE (NEZ5: E, E51, MX, AR)	
103	A-1099-172-A	PANEL BOARD, COMPLETE (NEZ3: EA)	
103	A-1099-813-A	PANEL BOARD, COMPLETE (NEZ5: CND)	
103	A-1099-837-A	PANEL BOARD, COMPLETE (for WHITE) (NEZ5: SP, KR)	
104	2-581-391-01	PLATE, LIGHT GUIDE	
105	2-594-335-01	HOLDER (LCD-C)	
106	4-951-620-01	SCREW (2.6X8), +BVTP	
107	2-591-582-01	PLATE (FRONT FFC), PROTECTION	
108	2-586-988-02	SHEET (LCD), DIFFUSION	
D1804	6-501-139-01	LED SELU2B10A-SLF62 (LCD BACK LIGHT)	(NEZ3)
D1804	6-501-138-01	LED SELU2WA10C-LF62 (LCD BACK LIGHT)	(NEZ5)
D1805	6-501-138-01	LED SELU2WA10C-LF62 (LCD BACK LIGHT)	(NEZ5)
D1805	6-501-139-01	LED SELU2B10A-SLF62 (LCD BACK LIGHT)	(NEZ3)
FFC801	1-830-583-11	WIRE (FLAT TYPE) (7 CORE)	
FFC805	1-830-582-12	WIRE (FLAT TYPE) (19 CORE)	
FFC1803	1-830-579-11	WIRE (FLAT TYPE) (9 CORE)	
FFC1804	1-830-580-12	WIRE (FLAT TYPE) (15 CORE) (NEZ5: AEP, UK, EE, RU)	
FFC1804	1-830-581-12	WIRE (FLAT TYPE) (13 CORE) (EXCEPT NEZ5: AEP, UK, EE, RU)	
LCD1801	1-805-843-11	DISPLAY PANEL, LIQUID CRYSTAL (NEZ3/NEZ5 (WHITE): SP, KR)	
LCD1801	1-805-843-21	DISPLAY PANEL, LIQUID CRYSTAL (NEZ5 (SILVER): CND, AEP, UK, E, E51, EE, RU, MX, TW, AR, SP, KR)	

8-4. CABINET (TOP) SECTION

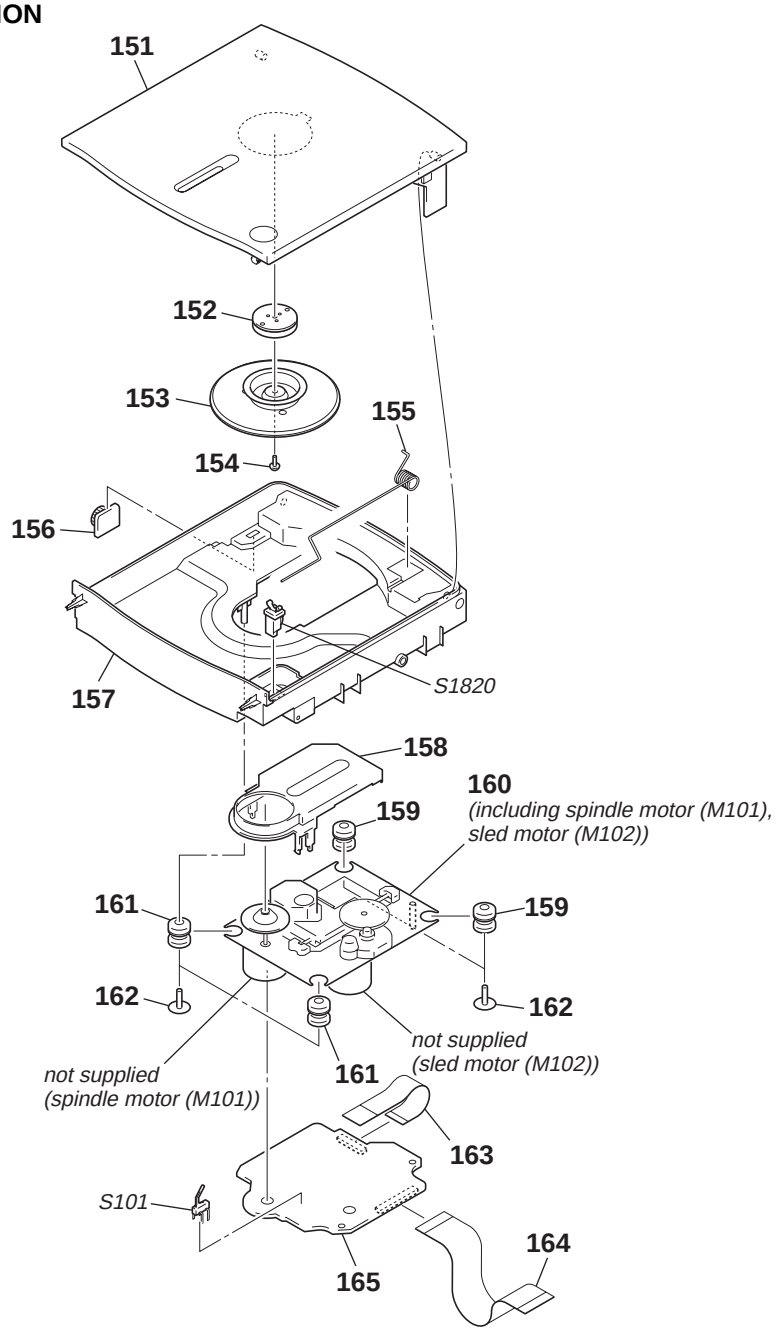

The components identified by mark ⚠ or dotted line with mark ⚠ are critical for safety. Replace only with part number specified.	Les composants identifiés par une marque ⚠ sont critiques pour la sécurité. Ne les remplacer que par une pièce portant le numéro spécifié.

Ref. No.	Part No.	Description	Remark
151	X-2048-962-1	LID ASSY, CD (WHITE) (NEZ5)	
151	X-2050-124-1	LID ASSY, CD (SILVER)	
152	1-452-899-11	MAGNET	
153	3-019-395-01	PLATE, CHUCKING	
154	3-253-143-01	SCREW (B2.6), (+) P TAPPING	
155	2-581-393-01	SPRING (CD)	
156	4-242-171-01	DAMPER 150N	
157	2-581-388-01	CABINET (TOP) (SILVER) (NEZ3: US)	
157	2-581-388-11	CABINET (TOP) (SILVER) (EXCEPT NEZ3: US)	
157	2-581-388-31	CABINET (TOP) (WHITE) (NEZ5)	
158	4-247-493-01	COVER, CD	
159	3-931-379-21	RUBBER, VIBRATION PROOF (RED)	
⚠160	8-820-221-01	OPTICAL PICK-UP BLOCK KSM-213EDP/C2NP (Including spindle motor (M101), sled motor (M102))	
161	3-931-379-31	RUBBER, VIBRATION PROOF (GREEN)	
162	3-921-725-01	SCREW (2.6X10), +PWH	
163	1-827-992-11	WIRE (FLAT TYPE) (16 CORE)	
164	1-830-585-11	WIRE (FLAT TYPE) (27 CORE)	
165	A-1127-998-A	CD BOARD, COMPLETE	
S101	1-771-853-11	SWITCH, DETECTION (LIMIT)	
S1820	1-692-960-21	SWITCH, PUSH (1 KEY) (CD LID OPEN/CLOSE DETECT)	

8-5. MAIN BOARD SECTION

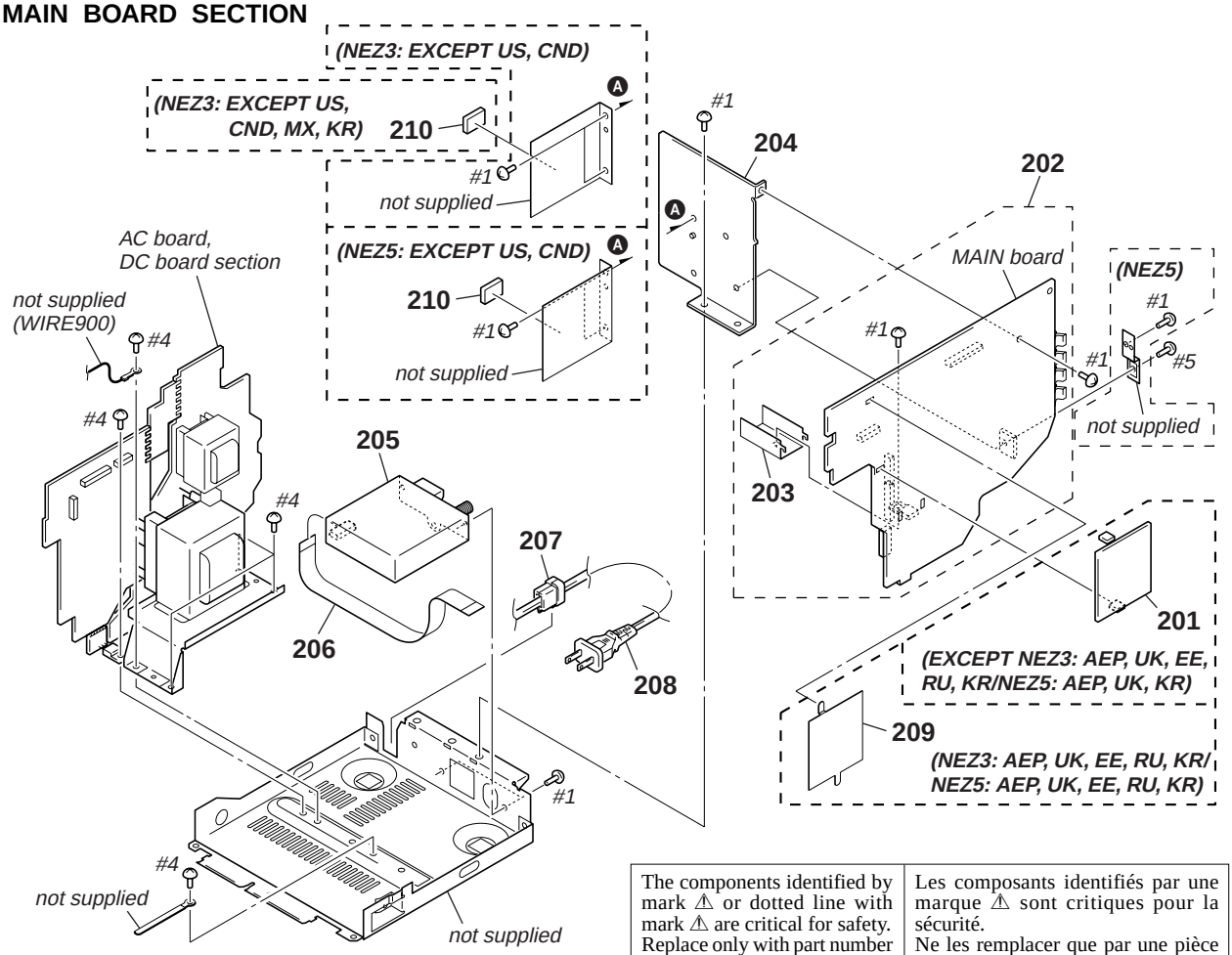

The components identified by mark ⚠ or dotted line with mark ⚠ are critical for safety. Replace only with part number specified.	Les composants identifiés par une marque ⚠ sont critiques pour la sécurité. Ne les remplacer que par une pièce portant le numéro spécifié.

Ref. No.	Part No.	Description	Remark
201	A-1101-746-A	SHIELD BOARD, COMPLETE	(EXCEPT NEZ3: AEP, UK, EE, RU, KR/ NEZ5: AEP, UK, EE, RU, KR)
202	A-1095-890-A	MAIN BOARD, COMPLETE (NEZ3: US, CND)	
202	A-1095-894-A	MAIN BOARD, COMPLETE	(NEZ3: AEP, UK, EE, RU)
202	A-1095-921-A	MAIN BOARD, COMPLETE (NEZ3: SP)	
202	A-1095-929-A	MAIN BOARD, COMPLETE (NEZ5: CND)	
202	A-1095-932-A	MAIN BOARD, COMPLETE	(NEZ5: AEP, UK, EE, RU)
202	A-1095-970-A	MAIN BOARD, COMPLETE	(NEZ5: E, E51, SP, AR)
202	A-1098-686-A	MAIN BOARD, COMPLETE (NEZ3: MX)	
202	A-1098-752-A	MAIN BOARD, COMPLETE (NEZ5: TW)	
202	A-1098-904-A	MAIN BOARD, COMPLETE (NEZ3: AR)	
202	A-1098-933-A	MAIN BOARD, COMPLETE (NEZ3: AUS)	
202	A-1098-968-A	MAIN BOARD, COMPLETE (NEZ3: TW)	
202	A-1099-033-A	MAIN BOARD, COMPLETE (NEZ3: KR)	
202	A-1099-078-A	MAIN BOARD, COMPLETE (NEZ3: E, E51)	
202	A-1099-170-A	MAIN BOARD, COMPLETE (NEZ3: EA)	
202	A-1101-169-A	MAIN BOARD, COMPLETE (NEZ5: KR)	
202	A-1119-015-A	MAIN BOARD, COMPLETE (NEZ5: MX)	
203	2-586-961-01	HEAT SINK	
204	2-581-392-01	HEAT SINK (NEZ3: US, CND)	
204	2-581-392-11	HEAT SINK	(NEZ3: AEP, UK, E, E51, EA, EE, RU, MX, SP, TW, AR, KR, AUS)
204	2-581-392-21	HEAT SINK (NEZ5)	
205	1-693-625-11	TUNER UNIT (NEZ3: US, CND/NEZ5: CND)	
205	1-693-626-11	TUNER UNIT (NEZ5: AEP, UK, EE, RU)	
205	1-693-628-11	TUNER UNIT (NEZ3: E, E51, EA, MX, SP, TW,	AR, AUS/NEZ5: E, E51, MX, SP, TW, AR)
205	1-693-629-11	TUNER UNIT (NEZ3: AEP, UK, EE, RU, KR/	NEZ5: KR)
206	1-769-946-11	WIRE (FLAT TYPE) (11 CORE)	(EXCEPT NEZ5: AEP, UK, EE, RU)
206	1-773-011-11	WIRE (FLAT TYPE) (15 CORE)	(NEZ5: AEP, UK, EE, RU)
207	3-703-244-00	BUSHING (2104), CORD	(EXCEPT NEZ3: E, MX/NEZ5: E, MX)
* 207	3-703-571-12	BUSHING (S) (4516), CORD	(NEZ3: E, MX/NEZ5: E, MX)
⚠208	1-769-079-41	CORD, POWER (NEZ3: KR/NEZ5: KR)	
⚠208	1-769-744-81	CORD, POWER (NEZ3: UK, EA/NEZ5: UK)	
⚠208	1-775-790-12	CORD, POWER (NEZ3: AUS)	
⚠208	1-827-226-31	CORD, POWER (NEZ3: E, MX/NEZ5: E, MX)	
⚠208	1-827-597-31	CORD, POWER (NEZ3: TW/NEZ5: TW)	
⚠208	1-829-387-11	CORD, POWER (NEZ3: AR/NEZ5: AR)	
⚠208	1-830-188-11	CORD, POWER (NEZ3: AEP, E51, EE, RU, SP/	NEZ5: AEP, E51, EE, RU, SP)
⚠208	1-830-190-11	CORD, POWER (NEZ3: US, CND/NEZ5: CND)	
209	2-598-643-01	PLATE (M), SHIELD	(NEZ3: AEP, UK, EE, RU, KR/ NEZ5: AEP, UK, EE, RU, KR)
210	2-594-960-31	SPACER (TRANS)	
#1	7-685-646-79	SCREW +BVTP 3X8 TYPE2 N-S	
#4	7-685-871-01	SCREW +BVTT 3X6 (S)	
#5	7-685-647-79	SCREW +BVTP 3X12 TYPE2 IT-3 (NEZ3)	
#5	7-685-648-79	SCREW +BVTP 3X10 TYPE2 N-S (NEZ5)	

8-6. AC BOARD, DC BOARD SECTION

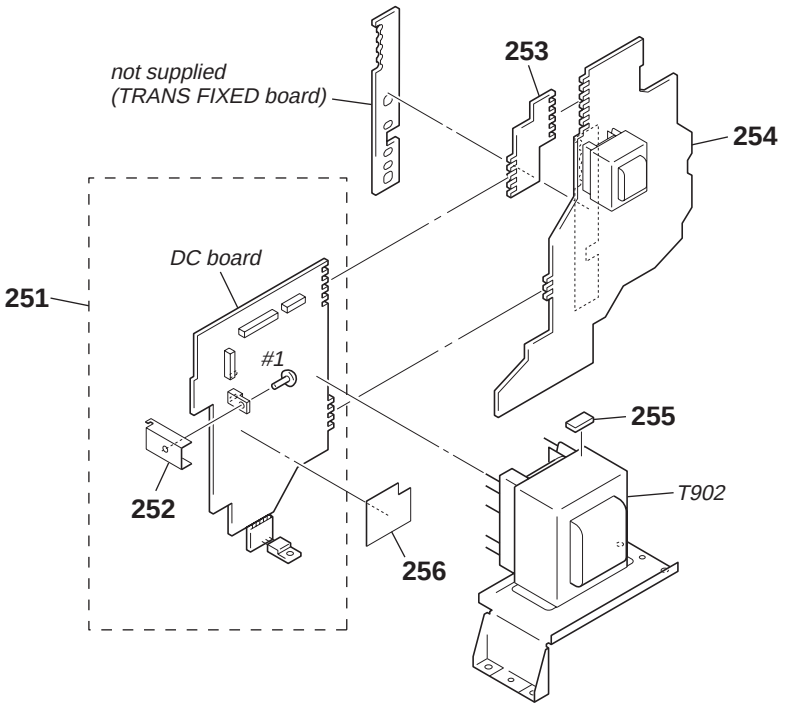

The components identified by mark ⚠ or dotted line with mark ⚠ are critical for safety. Replace only with part number specified.	Les composants identifiés par une marque ⚠ sont critiques pour la sécurité. Ne les remplacer que par une pièce portant le numéro spécifié.

Ref. No.	Part No.	Description	Remark
251	A-1090-922-A	DC BOARD, COMPLETE	(EXCEPT NEZ5: AEP, UK, EE, RU)
251	A-1106-494-A	DC BOARD, COMPLETE	(NEZ5: AEP, UK, EE, RU)
252	2-586-961-11	HEAT SINK	
253	A-1101-747-A	CONNECT BOARD, COMPLETE (NEZ3: US, CND)	
253	A-1101-751-A	CONNECT BOARD, COMPLETE	(EXCEPT NEZ3: US, CND)
254	A-1090-924-A	AC BOARD, COMPLETE (NEZ3: US, CND)	
254	A-1090-970-A	AC BOARD, COMPLETE	(NEZ3: AEP, UK, EE, RU)
254	A-1090-971-A	AC BOARD, COMPLETE (NEZ3: E, E51, SP)	
254	A-1090-972-A	AC BOARD, COMPLETE (NEZ5: CND)	
254	A-1090-977-A	AC BOARD, COMPLETE	(NEZ5: AEP, UK, EE, RU)
254	A-1090-978-A	AC BOARD, COMPLETE (NEZ5: E, E51, SP)	
254	A-1098-903-A	AC BOARD, COMPLETE (NEZ3: AR)	
254	A-1098-932-A	AC BOARD, COMPLETE (NEZ3: AUS)	
254	A-1098-967-A	AC BOARD, COMPLETE (NEZ3: MX, TW)	
254	A-1099-032-A	AC BOARD, COMPLETE (NEZ3: KR)	
254	A-1099-169-A	AC BOARD, COMPLETE (NEZ3: EA)	
254	A-1101-058-A	AC BOARD, COMPLETE (NEZ5: MX, TW)	
254	A-1101-132-A	AC BOARD, COMPLETE (NEZ5: AR)	
254	A-1101-168-A	AC BOARD, COMPLETE (NEZ5: KR)	
255	2-594-960-01	SPACER (TRANSFORMER)	(NEZ3: E, E51, EA, SP, AR/NEZ5: E, E51, SP, AR)
255	2-594-960-11	SPACER (TRANSFORMER)	(NEZ3: AEP, UK, EE, RU, MX, TW, KR, AUS/ NEZ5: CND, AEP, UK, EE, RU, MX, TW, KR)
255	2-594-960-21	SPACER (TRANSFORMER) (NEZ3: US, CND)	
256	2-633-205-01	INSULATED PLATE	
⚠T902	1-443-565-11	TRANSFORMER, POWER (NEZ5: CND)	
⚠T902	1-443-566-11	TRANSFORMER, POWER	(NEZ5: AEP, UK, EE, RU)
⚠T902	1-443-567-11	TRANSFORMER, POWER	(NEZ5: E, E51, MX, TW, AR, SP, KR)
⚠T902	1-443-573-11	TRANSFORMER, POWER	(NEZ3: AEP, UK, EE, RU)
⚠T902	1-443-574-11	TRANSFORMER, POWER	(NEZ3: E, E51, MX, SP, TW, AR, KR, AUS)
⚠T902	1-443-626-11	TRANSFORMER, POWER (NEZ3: US, CND)	
⚠T902	1-443-738-11	POWER TRANSFORMER (NEZ3: EA)	
#1	7-685-646-79	SCREW +BVTP 3X8 TYPE2 N-S	

SECTION 9
ELECTRICAL PARTS LIST

NOTE:

- Due to standardization, replacements in the parts list may be different from the parts specified in the diagrams or the components used on the set.
- -XX and -X mean standardized parts, so they may have some difference from the original one.
- RESISTORS
  All resistors are in ohms.
  METAL: Metal-film resistor.
  METAL OXIDE: Metal oxide-film resistor.
  F: nonflammable
- Abbreviation
  AR : Argentina model E51 : Chirean and Peruvian model KR : Korean model SP : Singapore model
  AUS : Australian model EA : Saudi Arabia model MX : Mexican model TW : Taiwan model
  CND : Canadian model EE : East European model RU : Russian model
- Items marked "*" are not stocked since they are seldom required for routine service. Some delay should be anticipated when ordering these items.
- SEMICONDUCTORS
  In each case, u: µ, for example:
  uA... : µA... uPA... : µPA...
  uPB... : µPB... uPC... : µPC...
  uPD... : µPD...
- CAPACITORS
  uF: µF
- COILS
  uH: µH

The components identified by mark ⚠ or dotted line with mark ⚠ are critical for safety.
Replace only with part number specified.

Les composants identifiés par une marque ⚠ sont critiquens pour la sécurité.
Ne les remplacer que par une pièce portant le numéro spécifié.

When indicating parts by reference number, please include the board.

Ref. No.	Part No.	Description				Remark
	A-1090-924-A	AC BOARD, COMPLETE (NEZ3: US, CND)				
	A-1090-970-A	AC BOARD, COMPLETE (NEZ3: AEP, UK, EE, RU)				
	A-1090-971-A	AC BOARD, COMPLETE (NEZ3: E, E51, SP)				
	A-1090-972-A	AC BOARD, COMPLETE (NEZ5: CND)				
	A-1090-977-A	AC BOARD, COMPLETE (NEZ5: AEP, UK, EE, RU)				
	A-1090-978-A	AC BOARD, COMPLETE (NEZ5: E, E51, SP)				
	A-1098-903-A	AC BOARD, COMPLETE (NEZ3: AR)				
	A-1098-932-A	AC BOARD, COMPLETE (NEZ3: AUS)				
	A-1098-967-A	AC BOARD, COMPLETE (NEZ3: MX, TW)				
	A-1099-032-A	AC BOARD, COMPLETE (NEZ3: KR)				
	A-1099-169-A	AC BOARD, COMPLETE (NEZ3: EA)				
	A-1101-058-A	AC BOARD, COMPLETE (NEZ5: MX, TW)				
	A-1101-132-A	AC BOARD, COMPLETE (NEZ5: AR)				
	A-1101-168-A	AC BOARD, COMPLETE (NEZ5: KR)				
		**********				
		< CAPACITOR >				
C914	1-126-964-11	ELECT	10uF	20%	50V	
C915	1-136-497-81	FILM	0.1uF	5%	50V	
C921	1-126-767-11	ELECT (EXCEPT NEZ3: E, E51, EA, SP/NEZ5: E, E51, SP)	1000uF	20%	16V	
C921	1-126-952-11	ELECT (NEZ3: E, E51, EA, SP/NEZ5: E, E51, SP)	1000uF	20%	35V	
⚠C931	1-113-924-11	CERAMIC	0.0047uF	20%	250V	
		< CONNECTOR >				
* CN901	1-793-660-11	PIN, CONNECTOR (PC BOARD) 3P				
		< DIODE >				
D906	8-719-988-61	DIODE 1SS355TE-17				
D907	8-719-063-79	DIODE 1N4002B				
D908	8-719-063-79	DIODE 1N4002B				
D909	8-719-063-79	DIODE 1N4002B				
D910	8-719-063-79	DIODE 1N4002B				
D922	8-719-988-61	DIODE 1SS355TE-17				
D923	8-719-000-08	DIODE MC2838				
		< LINE FILTER >				
⚠LF901	1-402-663-11	TRANSFORMER, LINE FILTER (LFT) (EXCEPT NEZ3: US, CND/NEZ5: CND)				
		< RESISTOR >				
⚠R903	1-219-512-22	METAL (NEZ3: US, CND/NEZ5: CND)	2.2M	5%	1/2W F	
R904	1-216-829-11	METAL CHIP	4.7K	5%	1/10W	
R905	1-216-829-11	METAL CHIP	4.7K	5%	1/10W	
R906	1-216-833-11	METAL CHIP	10K	5%	1/10W	
R908	1-216-821-11	METAL CHIP	1K	5%	1/10W	
R909	1-216-821-11	METAL CHIP	1K	5%	1/10W	
		< RELAY >				
⚠RY901	1-755-276-11	RELAY, POWER				
		< SWITCH >				
⚠S901	1-786-055-21	SELECTOR, VOLTAGE (VOLTAGE SELECTOR) (NEZ3: E, E51, EA, SP/NEZ5: E, E51, SP)				
		< TRANSFORMER >				
⚠T901	1-439-772-11	TRANSFORMER, POWER (NEZ3: E, E51, EA, SP, AR /NEZ5: E, E51, SP, AR)				
⚠T901	1-439-779-11	TRANSFORMER, POWER (NEZ3: AEP, UK, EE, RU, KR, AUS/ NEZ5: AEP, UK, EE, RU, KR)				
⚠T901	1-439-781-11	TRANSFORMER, POWER (NEZ3: US, CND, MX, TW/NEZ5: CND, MX, TW)				
		**********				
	A-1127-998-A	CD BOARD, COMPLETE				
		**********				
		< CAPACITOR/JUMPER RESISTOR >				
C10	1-165-989-11	CERAMIC CHIP	10uF	10%	6.3V	
C11	1-165-989-11	CERAMIC CHIP	10uF	10%	6.3V	
C14	1-164-360-11	CERAMIC CHIP	0.1uF		16V	
C15	1-164-360-11	CERAMIC CHIP	0.1uF		16V	
C16	1-115-156-11	CERAMIC CHIP	1uF		10V	
C17	1-126-246-11	ELECT CHIP	220uF	20%	4V	
C18	1-162-964-11	CERAMIC CHIP	0.001uF	10%	50V	
C111	1-162-967-11	CERAMIC CHIP	0.0033uF	10%	50V	
C112	1-164-315-11	CERAMIC CHIP	470PF	5%	50V	
C113	1-162-967-11	CERAMIC CHIP	0.0033uF	10%	50V	
C114	1-164-315-11	CERAMIC CHIP	470PF	5%	50V	
C115	1-164-360-11	CERAMIC CHIP	0.1uF		16V	
C116	1-128-995-21	ELECT CHIP	100uF	20%	10V	
C122	1-107-826-11	CERAMIC CHIP	0.1uF	10%	16V	
C123	1-107-826-11	CERAMIC CHIP	0.1uF	10%	16V	
C124	1-162-959-11	CERAMIC CHIP	330PF	5%	50V	
C125	1-164-360-11	CERAMIC CHIP	0.1uF		16V	

Ref. No.	Part No.	Description			Remark
C131	1-162-927-11	CERAMIC CHIP	100PF	5%	50V
C132	1-117-863-11	CERAMIC CHIP	0.47uF	10%	6.3V
C133	1-162-970-11	CERAMIC CHIP	0.01uF	10%	25V
C134	1-164-360-11	CERAMIC CHIP	0.1uF		16V
C141	1-107-826-11	CERAMIC CHIP	0.1uF	10%	16V
C142	1-162-965-11	CERAMIC CHIP	0.0015uF	10%	50V
C143	1-164-360-11	CERAMIC CHIP	0.1uF		16V
C151	1-128-995-21	ELECT CHIP	100uF	20%	10V
C161	1-164-360-11	CERAMIC CHIP	0.1uF		16V
C162	1-164-360-11	CERAMIC CHIP	0.1uF		16V
C163	1-164-360-11	CERAMIC CHIP	0.1uF		16V
C171	1-162-919-11	CERAMIC CHIP	22PF	5%	50V
C172	1-162-920-11	CERAMIC CHIP	27PF	5%	50V
C174	1-164-360-11	CERAMIC CHIP	0.1uF		16V
C181	1-164-360-11	CERAMIC CHIP	0.1uF		16V
C182	1-164-360-11	CERAMIC CHIP	0.1uF		16V
C183	1-124-778-00	ELECT CHIP	22uF	20%	6.3V
C184	1-124-778-00	ELECT CHIP	22uF	20%	6.3V
C185	1-164-315-11	CERAMIC CHIP	470PF	5%	50V
C186	1-164-315-11	CERAMIC CHIP	470PF	5%	50V
C194	1-164-360-11	CERAMIC CHIP	0.1uF		16V
C195	1-164-360-11	CERAMIC CHIP	0.1uF		16V
C196	1-164-360-11	CERAMIC CHIP	0.1uF		16V
C201	1-128-995-21	ELECT CHIP	100uF	20%	10V
C203	1-128-995-21	ELECT CHIP	100uF	20%	10V
C209	1-162-970-11	CERAMIC CHIP	0.01uF	10%	25V
C210	1-107-826-11	CERAMIC CHIP	0.1uF	10%	16V
C211	1-164-230-11	CERAMIC CHIP	220PF	5%	50V
C212	1-162-919-11	CERAMIC CHIP	22PF	5%	50V
C213	1-162-919-11	CERAMIC CHIP	22PF	5%	50V
C251	1-162-969-11	CERAMIC CHIP	0.0068uF	10%	25V
C252	1-164-360-11	CERAMIC CHIP	0.1uF		16V
C255	1-164-360-11	CERAMIC CHIP	0.1uF		16V
C257	1-164-360-11	CERAMIC CHIP	0.1uF		16V
C258	1-164-360-11	CERAMIC CHIP	0.1uF		16V
C259	1-164-360-11	CERAMIC CHIP	0.1uF		16V
C260	1-128-394-11	ELECT CHIP	220uF	20%	10V
C302	1-164-360-11	CERAMIC CHIP	0.1uF		16V
C303	1-164-360-11	CERAMIC CHIP	0.1uF		16V
C305	1-126-246-11	ELECT CHIP	220uF	20%	4V
C306	1-164-360-11	CERAMIC CHIP	0.1uF		16V
C307	1-164-360-11	CERAMIC CHIP	0.1uF		16V
C308	1-126-208-21	ELECT CHIP	47uF	20%	4V
C309	1-164-360-11	CERAMIC CHIP	0.1uF		16V
C310	1-164-360-11	CERAMIC CHIP	0.1uF		16V
C311	1-164-360-11	CERAMIC CHIP	0.1uF		16V
C312	1-164-360-11	CERAMIC CHIP	0.1uF		16V
C313	1-164-360-11	CERAMIC CHIP	0.1uF		16V
C314	1-126-208-21	ELECT CHIP	47uF	20%	4V
C315	1-107-826-11	CERAMIC CHIP	0.1uF	10%	16V
C316	1-162-966-11	CERAMIC CHIP	0.0022uF	10%	50V
C317	1-162-970-11	CERAMIC CHIP	0.01uF	10%	25V
C318	1-162-970-11	CERAMIC CHIP	0.01uF	10%	25V
C320	1-162-964-11	CERAMIC CHIP	0.001uF	10%	50V
		< CONNECTOR >			
CN101	1-770-425-11	CONNECTOR, FFC/FPC 16P			

Ref. No.	Part No.	Description			Remark
CN201	1-818-350-11	CONNECTOR (FFC) 27P			
		< FERRITE BEAD >			
FB301	1-500-445-21	FERRITE, EMI (SMD) (2012)			
		< IC >			
IC101	8-752-425-12	IC CXD3059AR			
IC251	6-705-808-01	IC BA5947FM-E2			
IC301	6-705-365-01	IC TC94A34FG-002			
IC303	6-705-807-01	IC BH15FB1WG			
		< TRANSISTOR >			
Q10	6-551-120-01	TRANSISTOR	2SA2119K		
		< RESISTOR/FERRITE BEAD >			
R10	1-216-791-11	METAL CHIP	3.3	5%	1/10W
R11	1-216-864-11	SHORT CHIP	0		
R12	1-216-845-11	METAL CHIP	100K	5%	1/10W
R13	1-218-446-11	METAL CHIP	1	5%	1/10W
R111	1-216-821-11	METAL CHIP	1K	5%	1/10W
R112	1-216-835-11	METAL CHIP	15K	5%	1/10W
R113	1-216-821-11	METAL CHIP	1K	5%	1/10W
R114	1-216-835-11	METAL CHIP	15K	5%	1/10W
R121	1-216-835-11	METAL CHIP	15K	5%	1/10W
R131	1-216-857-11	METAL CHIP	1M	5%	1/10W
R132	1-216-833-11	METAL CHIP	10K	5%	1/10W
R133	1-216-848-11	METAL CHIP	180K	5%	1/10W
R141	1-216-829-11	METAL CHIP	4.7K	5%	1/10W
R142	1-216-821-11	METAL CHIP	1K	5%	1/10W
R143	1-216-827-11	METAL CHIP	3.3K	5%	1/10W
R151	1-216-864-11	SHORT CHIP	0		
R161	1-216-809-11	METAL CHIP	100	5%	1/10W
R162	1-216-841-11	METAL CHIP	47K	5%	1/10W
R163	1-216-809-11	METAL CHIP	100	5%	1/10W
R165	1-216-864-11	SHORT CHIP	0		
R166	1-216-821-11	METAL CHIP	1K	5%	1/10W
R167	1-216-809-11	METAL CHIP	100	5%	1/10W
R171	1-216-817-11	METAL CHIP	470	5%	1/10W
R172	1-216-857-11	METAL CHIP	1M	5%	1/10W
R173	1-216-295-00	SHORT CHIP	0		
R181	1-216-809-11	METAL CHIP	100	5%	1/10W
R182	1-216-809-11	METAL CHIP	100	5%	1/10W
R191	1-216-864-11	SHORT CHIP	0		
R201	1-500-445-21	FERRITE, EMI (SMD) (2012)			
R203	1-216-864-11	SHORT CHIP	0		
R204	1-216-295-00	SHORT CHIP	0		
R205	1-216-864-11	SHORT CHIP	0		
R251	1-216-833-11	METAL CHIP	10K	5%	1/10W
R252	1-216-837-11	METAL CHIP	22K	5%	1/10W
R253	1-216-833-11	METAL CHIP	10K	5%	1/10W
R301	1-216-845-11	METAL CHIP	100K	5%	1/10W
R302	1-216-833-11	METAL CHIP	10K	5%	1/10W
R303	1-216-845-11	METAL CHIP	100K	5%	1/10W
R305	1-216-845-11	METAL CHIP	100K	5%	1/10W
R306	1-216-864-11	SHORT CHIP	0		
R307	1-216-833-11	METAL CHIP	10K	5%	1/10W
R313	1-216-813-11	METAL CHIP	220	5%	1/10W

CD | CONNECT | DC | HEAD PHONE

Ref. No.	Part No.	Description			Remark
R351	1-216-809-11	METAL CHIP	100	5%	1/10W
R352	1-216-809-11	METAL CHIP	100	5%	1/10W
R353	1-216-809-11	METAL CHIP	100	5%	1/10W
R354	1-216-809-11	METAL CHIP	100	5%	1/10W
R401	1-216-809-11	METAL CHIP	100	5%	1/10W
R402	1-216-809-11	METAL CHIP	100	5%	1/10W
R403	1-216-809-11	METAL CHIP	100	5%	1/10W
R404	1-216-809-11	METAL CHIP	100	5%	1/10W
R405	1-216-809-11	METAL CHIP	100	5%	1/10W
R406	1-216-809-11	METAL CHIP	100	5%	1/10W
R407	1-216-809-11	METAL CHIP	100	5%	1/10W
R408	1-216-809-11	METAL CHIP	100	5%	1/10W
R409	1-216-809-11	METAL CHIP	100	5%	1/10W
R410	1-216-809-11	METAL CHIP	100	5%	1/10W
R411	1-216-809-11	METAL CHIP	100	5%	1/10W
R412	1-216-809-11	METAL CHIP	100	5%	1/10W
R419	1-216-809-11	METAL CHIP	100	5%	1/10W
		< VIBRATOR >			
X171	1-767-408-21	VIBRATOR, CRYSTAL (16.9344MHz)			

****

	A-1101-747-A	CONNECT BOARD, COMPLETE (NEZ3: US, CND)
	A-1101-751-A	CONNECT BOARD, COMPLETE (EXCEPT NEZ3: US, CND)
		**********

****

	A-1090-922-A	DC BOARD, COMPLETE (EXCEPT NEZ5: AEP, UK, EE, RU)
	A-1106-494-A	DC BOARD, COMPLETE (NEZ5: AEP, UK, EE, RU)
		**********
	2-586-961-01	HEAT SINK
	7-685-646-79	SCREW +BVTP 3X8 TYPE2 N-S

Ref. No.	Part No.	Description			Remark
		< CAPACITOR >			
C336	1-126-965-11	ELECT	22uF	20%	50V
C350	1-126-964-11	ELECT	10uF	20%	50V
C901	1-136-497-81	FILM	0.1uF	5%	50V
C902	1-136-497-81	FILM	0.1uF	5%	50V
C903	1-136-497-81	FILM	0.1uF	5%	50V
C918	1-104-655-91	ELECT	470uF	20%	6.3V
C919	1-126-943-21	ELECT	2200uF	20%	25V
C920	1-126-933-11	ELECT	100uF	20%	16V
C922	1-126-934-11	ELECT	220uF	20%	16V
C923	1-164-156-11	CERAMIC CHIP	0.1uF		25V
C925	1-162-974-11	CERAMIC CHIP	0.01uF		50V
C928	1-126-933-11	ELECT	100uF	20%	16V
C929	1-162-974-11	CERAMIC CHIP	0.01uF		50V
C930	1-164-156-11	CERAMIC CHIP	0.1uF		25V
		< CONNECTOR >			
CN900	1-568-828-11	CONNECTOR, FFC 9P			
* CN902	1-564-511-11	PLUG, CONNECTOR 8P			
CN903	1-564-507-11	PLUG, CONNECTOR 4P			

Ref. No.	Part No.	Description		Remark
		< DIODE >		
D322	8-719-000-07	DIODE	MC2836	
D911	8-719-063-79	DIODE	1N4002B	
D912	8-719-063-79	DIODE	1N4002B	
D913	8-719-063-79	DIODE	1N4002B	
D914	8-719-063-79	DIODE	1N4002B	
D916	8-719-046-47	DIODE	1N5401TM	
D917	8-719-046-47	DIODE	1N5401TM	
D918	8-719-046-47	DIODE	1N5401TM	
D919	8-719-046-47	DIODE	1N5401TM	
D920	8-719-000-08	DIODE	MC2838	
D926	8-719-063-79	DIODE	1N4002B	
D927	8-719-063-79	DIODE	1N4002B	
D928	8-719-063-79	DIODE	1N4002B	
D936	6-500-848-01	DIODE	MC2840-T112-1	
		< IC >		
IC900	8-759-231-57	IC	TA7810S	
IC901	6-703-546-01	IC	TA7804LS	
IC902	8-759-701-59	IC	NJM78M09FA	
IC903	6-703-546-01	IC	TA7804LS	
		< TRANSISTOR >		
Q311	8-729-037-13	TRANSISTOR	KTA1271Y	
Q315	8-729-027-43	TRANSISTOR	DTC114EKA-T146	
Q333	8-729-027-43	TRANSISTOR	DTC114EKA-T146	
Q338	8-729-027-43	TRANSISTOR	DTC114EKA-T146	
		< RESISTOR >		
R901	1-216-841-11	METAL CHIP	47K	5% 1/10W
R902	1-216-841-11	METAL CHIP	47K	5% 1/10W
R907	1-216-841-11	METAL CHIP	47K	5% 1/10W
R911	1-216-841-11	METAL CHIP	47K	5% 1/10W
R912	1-216-841-11	METAL CHIP	47K	5% 1/10W
R913	1-216-841-11	METAL CHIP	47K	5% 1/10W
R914	1-216-829-11	METAL CHIP	4.7K	5% 1/10W
R915	1-216-837-11	METAL CHIP	22K	5% 1/10W
R916	1-216-841-11	METAL CHIP	47K	5% 1/10W
R917	1-216-845-11	METAL CHIP	100K	5% 1/10W
R918	1-216-821-11	METAL CHIP	1K	5% 1/10W
R919	1-216-841-11	METAL CHIP	47K	5% 1/10W

****

	A-1090-813-A	HEAD PHONE BOARD, COMPLETE (NEZ3: US, CND)
	A-1090-905-A	HEAD PHONE BOARD, COMPLETE (NEZ5: CND)
	A-1095-915-A	HEAD PHONE BOARD, COMPLETE (NEZ3: AEP, UK, EE, RU, KR)
	A-1095-924-A	HEAD PHONE BOARD, COMPLETE (NEZ3: E, E51, EA, MX, SP, TW, AR, AUS)
	A-1095-934-A	HEAD PHONE BOARD, COMPLETE (NEZ5: AEP, UK, EE, RU)
	A-1095-972-A	HEAD PHONE BOARD, COMPLETE (NEZ5: E, E51, MX, TW, AR, SP)
	A-1102-061-A	HEAD PHONE BOARD, COMPLETE (NEZ5: KR)
		**********

Ref. No.	Part No.	Description		Remark
		< CAPACITOR >		
C520	1-162-974-11	CERAMIC CHIP	0.01uF	50V
C521	1-162-974-11	CERAMIC CHIP	0.01uF	50V

HEAD PHONE **MAIN**

Ref. No.	Part No.	Description				Remark
		< FLAT TYPE WIRE >				
FFC501	1-830-584-11	WIRE (FLAT TYPE) (13 CORE)				
		< JACK >				
J500	1-793-829-11	JACK, HEADPHONE (PHONES)				
		< RESISTOR >				
R519	1-216-817-11	METAL CHIP	470	5%	1/10W	
R520	1-216-817-11	METAL CHIP	470	5%	1/10W	
R525	1-216-817-11	METAL CHIP	470	5%	1/10W	
R526	1-216-817-11	METAL CHIP	470	5%	1/10W	
R527	1-216-817-11	METAL CHIP	470	5%	1/10W	
R528	1-216-817-11	METAL CHIP	470	5%	1/10W	
R529	1-216-809-11	METAL CHIP	100	5%	1/10W	(NEZ3: US, CND)
R529	1-216-813-11	METAL CHIP	220	5%	1/10W	(EXCEPT NEZ3: US, CND/ NEZ5: AEP, UK, EE, RU)
R529	1-216-817-11	METAL CHIP	470	5%	1/10W	(NEZ5: AEP, UK, EE, RU)
R530	1-216-809-11	METAL CHIP	100	5%	1/10W	(NEZ3: US, CND)
R530	1-216-813-11	METAL CHIP	220	5%	1/10W	(EXCEPT NEZ3: US, CND/ NEZ5: AEP, UK, EE, RU)
R530	1-216-817-11	METAL CHIP	470	5%	1/10W	(NEZ5: AEP, UK, EE, RU)
R531	1-216-809-11	METAL CHIP	100	5%	1/10W	(NEZ3: US, CND)
R531	1-216-813-11	METAL CHIP	220	5%	1/10W	(EXCEPT NEZ3: US, CND/NEZ5)
R531	1-216-817-11	METAL CHIP	470	5%	1/10W	(NEZ5)
R532	1-216-809-11	METAL CHIP	100	5%	1/10W	(NEZ3: US, CND)
R532	1-216-813-11	METAL CHIP	220	5%	1/10W	(EXCEPT NEZ3: US, CND/NEZ5)
R532	1-216-817-11	METAL CHIP	470	5%	1/10W	(NEZ5)
R533	1-216-809-11	METAL CHIP	100	5%	1/10W	(NEZ3: US, CND)
R533	1-216-813-11	METAL CHIP	220	5%	1/10W	(EXCEPT NEZ3: US, CND/NEZ5)
R533	1-216-817-11	METAL CHIP	470	5%	1/10W	(NEZ5)
R534	1-216-809-11	METAL CHIP	100	5%	1/10W	(NEZ3: US, CND)
R534	1-216-813-11	METAL CHIP	220	5%	1/10W	(EXCEPT NEZ3: US, CND/NEZ5)
R534	1-216-817-11	METAL CHIP	470	5%	1/10W	(NEZ5)

****

Ref. No.	Part No.	Description	Remark
	A-1095-890-A	MAIN BOARD, COMPLETE (NEZ3: US, CND)	
	A-1095-894-A	MAIN BOARD, COMPLETE	(NEZ3: AEP, UK, EE, RU)
	A-1095-921-A	MAIN BOARD, COMPLETE (NEZ3: SP)	
	A-1095-929-A	MAIN BOARD, COMPLETE (NEZ5: CND)	
	A-1095-932-A	MAIN BOARD, COMPLETE	(NEZ5: AEP, UK, EE, RU)
	A-1095-970-A	MAIN BOARD, COMPLETE	(NEZ5: E, E51, SP, AR)
	A-1098-686-A	MAIN BOARD, COMPLETE (NEZ3: MX)	
	A-1098-752-A	MAIN BOARD, COMPLETE (NEZ5: TW)	
	A-1098-904-A	MAIN BOARD, COMPLETE (NEZ3: AR)	
	A-1098-933-A	MAIN BOARD, COMPLETE (NEZ3: AUS)	
	A-1098-968-A	MAIN BOARD, COMPLETE (NEZ3: TW)	
	A-1099-033-A	MAIN BOARD, COMPLETE (NEZ3: KR)	
	A-1099-078-A	MAIN BOARD, COMPLETE (NEZ3: E, E51)	
	A-1099-170-A	MAIN BOARD, COMPLETE (NEZ3: EA)	
	A-1101-169-A	MAIN BOARD, COMPLETE (NEZ5: KR)	
	A-1119-015-A	MAIN BOARD, COMPLETE (NEZ5: MX)	
		**********	
	2-586-961-01	HEAT SINK	
	7-685-646-79	SCREW +BVTP 3X8 TYPE2 N-S	
		< CAPACITOR >	
C101	1-162-964-11	CERAMIC CHIP 0.001uF 10%	50V
C102	1-162-966-11	CERAMIC CHIP 0.0022uF 10%	50V
C103	1-162-927-11	CERAMIC CHIP 100PF 5%	50V
C104	1-104-665-11	ELECT 100uF 20%	25V
C106	1-164-227-11	CERAMIC CHIP 0.022uF 10%	25V
C107	1-126-961-11	ELECT 2.2uF 20%	50V
C108	1-162-968-11	CERAMIC CHIP 0.0047uF 10%	50V
C111	1-162-964-11	CERAMIC CHIP 0.001uF 10%	50V
C113	1-126-957-11	ELECT 0.22uF 20%	50V
C114	1-126-959-11	ELECT 0.47uF 20%	50V
C115	1-126-964-11	ELECT 10uF 20%	50V
C116	1-162-962-11	CERAMIC CHIP 470PF 10%	50V
C117	1-162-964-11	CERAMIC CHIP 0.001uF 10%	50V
C118	1-165-176-11	CERAMIC CHIP 0.047uF 10%	16V
C119	1-162-974-11	CERAMIC CHIP 0.01uF	50V
C120	1-162-960-11	CERAMIC CHIP 220PF 10%	50V
C121	1-164-360-11	CERAMIC CHIP 0.1uF	16V (NEZ3: AEP, UK, EE, RU, EA, KR, AUS/ NEZ5: AEP, UK, EE, RU, KR)
C126	1-162-960-11	CERAMIC CHIP 220PF 10%	50V
C127	1-162-962-11	CERAMIC CHIP 470PF 10%	50V
C133	1-130-491-00	MYLAR 0.047uF 5%	50V
C134	1-162-964-11	CERAMIC CHIP 0.001uF 10%	50V
C135	1-126-964-11	ELECT 10uF 20%	50V
C136	1-126-964-11	ELECT 10uF 20%	50V
C138	1-126-965-11	ELECT 22uF 20%	50V
C139	1-162-962-11	CERAMIC CHIP 470PF 10%	50V
C140	1-162-960-11	CERAMIC CHIP 220PF 10%	50V
C201	1-162-964-11	CERAMIC CHIP 0.001uF 10%	50V
C202	1-162-966-11	CERAMIC CHIP 0.0022uF 10%	50V
C203	1-162-927-11	CERAMIC CHIP 100PF 5%	50V
C204	1-104-665-11	ELECT 100uF 20%	25V
C206	1-164-227-11	CERAMIC CHIP 0.022uF 10%	25V
C207	1-126-961-11	ELECT 2.2uF 20%	50V
C208	1-162-968-11	CERAMIC CHIP 0.0047uF 10%	50V
C211	1-162-964-11	CERAMIC CHIP 0.001uF 10%	50V
C213	1-126-957-11	ELECT 0.22uF 20%	50V
C214	1-126-959-11	ELECT 0.47uF 20%	50V
C215	1-126-964-11	ELECT 10uF 20%	50V
C216	1-162-962-11	CERAMIC CHIP 470PF 10%	50V
C217	1-162-964-11	CERAMIC CHIP 0.001uF 10%	50V
C218	1-165-176-11	CERAMIC CHIP 0.047uF 10%	16V

Ref. No.	Part No.	Description			Remark
C219	1-162-974-11	CERAMIC CHIP	0.01uF		50V
C220	1-162-960-11	CERAMIC CHIP	220PF	10%	50V
C221	1-164-360-11	CERAMIC CHIP	0.1uF		16V
		(NEZ3: AEP, UK, EE, RU, EA, KR, AUS/ NEZ5: AEP, UK, EE, RU, KR)			
C226	1-162-960-11	CERAMIC CHIP	220PF	10%	50V
C227	1-162-962-11	CERAMIC CHIP	470PF	10%	50V
C233	1-130-491-00	MYLAR	0.047uF	5%	50V
C234	1-162-964-11	CERAMIC CHIP	0.001uF	10%	50V
C235	1-126-964-11	ELECT	10uF	20%	50V
C236	1-126-964-11	ELECT	10uF	20%	50V
C238	1-126-965-11	ELECT	22uF	20%	50V
C239	1-162-962-11	CERAMIC CHIP	470PF	10%	50V
C240	1-162-960-11	CERAMIC CHIP	220PF	10%	50V
C301	1-162-915-11	CERAMIC CHIP	10PF	0.5PF	50V
C302	1-126-934-11	ELECT	220uF	20%	16V
C303	1-130-479-00	MYLAR	0.0047uF	5%	50V
C304	1-130-479-00	MYLAR	0.0047uF	5%	50V
C305	1-126-934-11	ELECT	220uF	20%	16V
C306	1-126-935-11	ELECT	470uF	20%	16V
C307	1-126-935-11	ELECT	470uF	20%	16V
C308	1-126-935-11	ELECT	470uF	20%	16V
C309	1-126-935-11	ELECT	470uF	20%	16V
C310	1-162-927-11	CERAMIC CHIP	100PF	5%	50V
C311	1-162-927-11	CERAMIC CHIP	100PF	5%	50V
C312	1-162-960-11	CERAMIC CHIP	220PF	10%	50V
C313	1-126-933-11	ELECT	100uF	20%	16V
C314	1-130-483-00	MYLAR	0.01uF	5%	50V
C315	1-162-927-11	CERAMIC CHIP	100PF	5%	50V
C316	1-162-927-11	CERAMIC CHIP	100PF	5%	50V
C317	1-162-919-11	CERAMIC CHIP	22PF	5%	50V
C318	1-162-927-11	CERAMIC CHIP	100PF	5%	50V
C319	1-162-927-11	CERAMIC CHIP	100PF	5%	50V
C320	1-162-927-11	CERAMIC CHIP	100PF	5%	50V
C321	1-162-927-11	CERAMIC CHIP	100PF	5%	50V
C322	1-162-927-11	CERAMIC CHIP	100PF	5%	50V
C324	1-126-963-11	ELECT	4.7uF	20%	50V (NEZ5)
C325	1-162-927-11	CERAMIC CHIP	100PF	5%	50V
C326	1-162-927-11	CERAMIC CHIP	100PF	5%	50V
C327	1-162-927-11	CERAMIC CHIP	100PF	5%	50V
C328	1-162-927-11	CERAMIC CHIP	100PF	5%	50V
C329	1-126-963-11	ELECT	4.7uF	20%	50V
C330	1-162-966-11	CERAMIC CHIP	0.0022uF	10%	50V
C331	1-107-726-91	CERAMIC CHIP	0.01uF	10%	16V
		(NEZ3: AEP, UK, EE, RU, EA, KR, AUS/ NEZ5: AEP, UK, EE, RU, KR)			
C335	1-126-927-21	ELECT	2200uF	20%	10V
C351	1-104-665-11	ELECT	100uF	20%	25V
C352	1-126-953-11	ELECT	2200uF	20%	35V
C353	1-126-953-11	ELECT	2200uF	20%	35V
C354	1-126-947-11	ELECT	47uF	20%	35V
C355	1-130-487-00	MYLAR	0.022uF	5%	50V
C356	1-130-471-00	MYLAR	0.001uF	5%	50V
C358	1-130-483-00	MYLAR	0.01uF	5%	50V
C361	1-126-947-11	ELECT	47uF	20%	35V
C362	1-126-964-11	ELECT	10uF	20%	50V
C363	1-126-964-11	ELECT	10uF	20%	50V
C364	1-126-964-11	ELECT	10uF	20%	50V

Ref. No.	Part No.	Description			Remark
C370	1-164-360-11	CERAMIC CHIP	0.1uF		16V
		(NEZ3: AEP, UK, EE, RU, EA, KR, AUS/ NEZ5: AEP, UK, EE, RU, KR)			
C501	1-162-927-11	CERAMIC CHIP	100PF	5%	50V
C503	1-126-947-11	ELECT	47uF	20%	35V
C505	1-162-927-11	CERAMIC CHIP	100PF	5%	50V
C506	1-126-947-11	ELECT	47uF	20%	35V
C507	1-107-826-11	CERAMIC CHIP	0.1uF	10%	16V
C511	1-126-957-11	ELECT	0.22uF	20%	50V
C512	1-136-169-00	FILM	0.22uF	5%	50V
C513	1-126-957-11	ELECT	0.22uF	20%	50V
C514	1-136-169-00	FILM	0.22uF	5%	50V
C516	1-126-933-11	ELECT	100uF	20%	16V
C523	1-162-962-11	CERAMIC CHIP	470PF	10%	50V
C524	1-162-962-11	CERAMIC CHIP	470PF	10%	50V
		< CONNECTOR >			
* CN301	1-815-448-11	PIN, CONNECTOR (PWB) 7P			
CN313	1-564-506-11	PLUG, CONNECTOR 3P (NEZ5)			
CN317	1-779-295-11	CONNECTOR, FFC (LIF (NON-ZIF)) 27P			
* CN319	1-568-830-11	SOCKET, CONNECTOR 11P (EXCEPT NEZ5: AEP, UK, EE, RU)			
CN319	1-784-776-11	CONNECTOR, FFC 15P (NEZ5: AEP, UK, EE, RU)			
CN320	1-784-774-11	CONNECTOR, FFC 13P (EXCEPT NEZ5: AEP, UK, EE, RU)			
CN320	1-784-776-11	CONNECTOR, FFC 15P (NEZ5: AEP, UK, EE, RU)			
CN321	1-784-780-11	CONNECTOR, FFC 19P			
CN500	1-784-735-11	CONNECTOR, FFC 13P			
		< DIODE >			
D302	8-719-988-61	DIODE 1SS355TE-17			
D305	8-719-063-79	DIODE 1N4002B			
D307	8-719-000-07	DIODE MC2836			
D313	8-719-000-08	DIODE MC2838 (NEZ5)			
D318	8-719-988-61	DIODE 1SS355TE-17			
D319	6-500-848-01	DIODE MC2840-T112-1			
D320	6-500-848-01	DIODE MC2840-T112-1			
D321	8-719-988-61	DIODE 1SS355TE-17			
D323	8-719-083-60	DIODE UDZSTE-174.7B			
D324	8-719-083-60	DIODE UDZSTE-174.7B			
D325	6-500-848-01	DIODE MC2840-T112-1			
D326	8-719-083-60	DIODE UDZSTE-174.7B			
D327	6-500-848-01	DIODE MC2840-T112-1 (EXCEPT NEZ3: AEP, UK, EE, RU, EA, KR/ NEZ5: AEP, UK, EE, RU, KR)			
		< FERRITE BEAD/JUMPER RESISTOR >			
FB303	1-500-445-21	FERRITE, EMI (SMD) (2012)			
FB304	1-500-445-21	FERRITE, EMI (SMD) (2012)			
FB305	1-500-445-21	FERRITE, EMI (SMD) (2012)			
FB306	1-216-864-11	SHORT CHIP 0			
FB307	1-216-864-11	SHORT CHIP 0 (EXCEPT NEZ3: US, CND, TW/NEZ5: US, CND, TW)			
FB307	1-500-445-21	FERRITE, EMI (SMD) (2012) (NEZ3: US, CND, TW/NEZ5: US, CND, TW)			
FB317	1-500-445-21	FERRITE, EMI (SMD) (2012)			

MAIN

Ref. No.	Part No.	Description			Remark
		< IC >			
IC302	6-702-895-01	IC BD3881FV			
IC501	8-759-333-24	IC LM1876TF			
		< JACK >			
J302	1-536-708-81	TERMINAL BOARD, PUSH (4P) (SPEAKER IMPEDANCE USE 6-16Ω)			
J321	1-815-629-11	JACK (AUDIO IN)			
		< JUMPER RESISTOR >			
JR001	1-216-864-11	SHORT CHIP	0		
JR002	1-216-864-11	SHORT CHIP	0		
JR003	1-216-864-11	SHORT CHIP	0		
JR004	1-216-864-11	SHORT CHIP	0		
JR152	1-216-864-11	SHORT CHIP	0		
		< COIL >			
L101	1-422-009-13	COIL, AIR-CORE			
L201	1-422-009-13	COIL, AIR-CORE			
		< TRANSISTOR >			
Q300	8-729-049-79	TRANSISTOR	RT1P137S-TP		
Q301	8-729-027-43	TRANSISTOR	DTC114EKA-T146		
Q316	8-729-120-28	TRANSISTOR	2SC1623-L5L6 (NEZ5)		
Q317	8-729-040-76	TRANSISTOR	KTA1273-Y-AT (NEZ5)		
Q320	8-729-209-15	TRANSISTOR	2SD2012		
Q321	8-729-120-28	TRANSISTOR	2SC1623-L5L6		
Q326	8-729-600-22	TRANSISTOR	2SA1235-F		
Q327	8-729-600-22	TRANSISTOR	2SA1235-F		
Q328	8-729-045-62	FET	2SK2158-T2B		
Q329	8-729-045-62	FET	2SK2158-T2B		
Q330	8-729-045-62	FET	2SK2158-T2B		
Q331	8-729-027-31	TRANSISTOR	DTA124EKA-T146		
Q332	8-729-027-31	TRANSISTOR	DTA124EKA-T146		
Q342	8-729-600-22	TRANSISTOR	2SA1235-F		
Q343	8-729-120-28	TRANSISTOR	2SC1623-L5L6		
Q344	8-729-028-54	TRANSISTOR	KTC3205		
Q347	8-729-037-03	TRANSISTOR	KTA1266GR-AT		
Q348	8-729-027-43	TRANSISTOR	DTC114EKA-T146		
		< RESISTOR >			
R100	1-216-833-11	METAL CHIP	10K	5%	1/10W
R101	1-216-841-11	METAL CHIP	47K	5%	1/10W
R102	1-216-841-11	METAL CHIP	47K	5%	1/10W
R103	1-216-817-11	METAL CHIP	470	5%	1/10W
R104	1-216-805-11	METAL CHIP	47	5%	1/10W
R105	1-216-849-11	METAL CHIP	220K	5%	1/10W
R106	1-216-829-11	METAL CHIP	4.7K	5%	1/10W
R107	1-216-845-11	METAL CHIP	100K	5%	1/10W
R108	1-216-833-11	METAL CHIP	10K	5%	1/10W
R109	1-216-829-11	METAL CHIP	4.7K	5%	1/10W
R110	1-216-821-11	METAL CHIP	1K	5%	1/10W
R111	1-216-837-11	METAL CHIP	22K	5%	1/10W
R112	1-216-837-11	METAL CHIP	22K	5%	1/10W
R114	1-216-829-11	METAL CHIP	4.7K	5%	1/10W
R116	1-216-841-11	METAL CHIP	47K	5%	1/10W
R117	1-216-825-11	METAL CHIP	2.2K	5%	1/10W
R118	1-216-833-11	METAL CHIP	10K	5%	1/10W
R119	1-216-833-11	METAL CHIP	10K	5%	1/10W
R120	1-216-833-11	METAL CHIP	10K	5%	1/10W
R121	1-216-825-11	METAL CHIP	2.2K	5%	1/10W
R122	1-216-845-11	METAL CHIP	100K	5%	1/10W (NEZ5)
R122	1-216-853-11	METAL CHIP	470K	5%	1/10W (NEZ3)
R123	1-216-825-11	METAL CHIP	2.2K	5%	1/10W
R124	1-216-837-11	METAL CHIP	22K	5%	1/10W
R125	1-216-837-11	METAL CHIP	22K	5%	1/10W
R126	1-216-837-11	METAL CHIP	22K	5%	1/10W
R128	1-216-821-11	METAL CHIP	1K	5%	1/10W
R131	1-216-821-11	METAL CHIP	1K	5%	1/10W
R132	1-216-821-11	METAL CHIP	1K	5%	1/10W
R133	1-216-864-11	SHORT CHIP	0		
R134	1-216-864-11	SHORT CHIP	0		
R135	1-216-845-11	METAL CHIP	100K	5%	1/10W
R136	1-216-833-11	METAL CHIP	10K	5%	1/10W
R137	1-216-829-11	METAL CHIP	4.7K	5%	1/10W
R138	1-216-825-11	METAL CHIP	2.2K	5%	1/10W
R139	1-216-837-11	METAL CHIP	22K	5%	1/10W
R143	1-216-833-11	METAL CHIP	10K	5%	1/10W
R145	1-216-864-11	SHORT CHIP	0		
R147	1-216-837-11	METAL CHIP	22K	5%	1/10W
R148	1-216-825-11	METAL CHIP	2.2K	5%	1/10W
R149	1-216-833-11	METAL CHIP	10K	5%	1/10W
R200	1-216-833-11	METAL CHIP	10K	5%	1/10W
R201	1-216-841-11	METAL CHIP	47K	5%	1/10W
R202	1-216-841-11	METAL CHIP	47K	5%	1/10W
R203	1-216-817-11	METAL CHIP	470	5%	1/10W
R204	1-216-805-11	METAL CHIP	47	5%	1/10W
R205	1-216-849-11	METAL CHIP	220K	5%	1/10W
R206	1-216-829-11	METAL CHIP	4.7K	5%	1/10W
R207	1-216-845-11	METAL CHIP	100K	5%	1/10W
R208	1-216-833-11	METAL CHIP	10K	5%	1/10W
R209	1-216-829-11	METAL CHIP	4.7K	5%	1/10W
R210	1-216-821-11	METAL CHIP	1K	5%	1/10W
R211	1-216-837-11	METAL CHIP	22K	5%	1/10W
R212	1-216-837-11	METAL CHIP	22K	5%	1/10W
R214	1-216-829-11	METAL CHIP	4.7K	5%	1/10W
R216	1-216-841-11	METAL CHIP	47K	5%	1/10W
R217	1-216-825-11	METAL CHIP	2.2K	5%	1/10W
R218	1-216-833-11	METAL CHIP	10K	5%	1/10W
R219	1-216-833-11	METAL CHIP	10K	5%	1/10W
R220	1-216-833-11	METAL CHIP	10K	5%	1/10W
R221	1-216-825-11	METAL CHIP	2.2K	5%	1/10W
R222	1-216-845-11	METAL CHIP	100K	5%	1/10W (NEZ5)
R222	1-216-853-11	METAL CHIP	470K	5%	1/10W (NEZ3)
R223	1-216-825-11	METAL CHIP	2.2K	5%	1/10W
R224	1-216-837-11	METAL CHIP	22K	5%	1/10W
R225	1-216-837-11	METAL CHIP	22K	5%	1/10W
R226	1-216-837-11	METAL CHIP	22K	5%	1/10W
R228	1-216-821-11	METAL CHIP	1K	5%	1/10W
R231	1-216-821-11	METAL CHIP	1K	5%	1/10W
R232	1-216-821-11	METAL CHIP	1K	5%	1/10W

MAIN

Ref. No.	Part No.	Description			Remark
R233	1-216-864-11	SHORT CHIP	0		
R234	1-216-864-11	SHORT CHIP	0		
R235	1-216-845-11	METAL CHIP	100K	5%	1/10W
R236	1-216-833-11	METAL CHIP	10K	5%	1/10W
R237	1-216-829-11	METAL CHIP	4.7K	5%	1/10W
R238	1-216-825-11	METAL CHIP	2.2K	5%	1/10W
R239	1-216-837-11	METAL CHIP	22K	5%	1/10W
R243	1-216-833-11	METAL CHIP	10K	5%	1/10W
R245	1-216-864-11	SHORT CHIP	0		
R247	1-216-837-11	METAL CHIP	22K	5%	1/10W
R248	1-216-825-11	METAL CHIP	2.2K	5%	1/10W
R249	1-216-833-11	METAL CHIP	10K	5%	1/10W
R301	1-216-841-11	METAL CHIP	47K	5%	1/10W
R302	1-216-833-11	METAL CHIP	10K	5%	1/10W
R303	1-216-833-11	METAL CHIP	10K	5%	1/10W
R304	1-216-829-11	METAL CHIP	4.7K	5%	1/10W
R309	1-216-821-11	METAL CHIP	1K	5%	1/10W
R310	1-216-829-11	METAL CHIP	4.7K	5%	1/10W
R311	1-216-793-11	METAL CHIP	4.7	5%	1/10W
R312	1-216-793-11	METAL CHIP	4.7	5%	1/10W
R318	1-216-825-11	METAL CHIP	2.2K	5%	1/10W (NEZ5)
R319	1-216-857-11	METAL CHIP	1M	5%	1/10W
R320	1-216-829-11	METAL CHIP	4.7K	5%	1/10W
R321	1-260-095-11	CARBON	470	5%	1/2W
R325	1-216-829-11	METAL CHIP	4.7K	5%	1/10W
R326	1-216-837-11	METAL CHIP	22K	5%	1/10W
R328	1-216-833-11	METAL CHIP	10K	5%	1/10W (NEZ5)
R329	1-216-845-11	METAL CHIP	100K	5%	1/10W (NEZ5)
R330	1-216-841-11	METAL CHIP	47K	5%	1/10W (NEZ5)
R331	1-216-841-11	METAL CHIP	47K	5%	1/10W (NEZ5)
R358	1-216-841-11	METAL CHIP	47K	5%	1/10W
R362	1-216-837-11	METAL CHIP	22K	5%	1/10W
R366	1-216-837-11	METAL CHIP	22K	5%	1/10W
R367	1-216-825-11	METAL CHIP	2.2K	5%	1/10W
R368	1-216-833-11	METAL CHIP	10K	5%	1/10W
R369	1-216-833-11	METAL CHIP	10K	5%	1/10W
R370	1-216-833-11	METAL CHIP	10K	5%	1/10W
R371	1-216-833-11	METAL CHIP	10K	5%	1/10W
R376	1-216-845-11	METAL CHIP	100K	5%	1/10W
R377	1-216-817-11	METAL CHIP	470	5%	1/10W
R378	1-216-817-11	METAL CHIP	470	5%	1/10W
R379	1-216-817-11	METAL CHIP	470	5%	1/10W
R380	1-216-817-11	METAL CHIP	470	5%	1/10W
R381	1-216-817-11	METAL CHIP	470	5%	1/10W
R382	1-216-817-11	METAL CHIP	470	5%	1/10W
R383	1-216-813-11	METAL CHIP	220	5%	1/10W
R384	1-216-813-11	METAL CHIP	220	5%	1/10W
R385	1-260-095-11	CARBON	470	5%	1/2W (NEZ3: US, CND)
R385	1-260-328-11	CARBON	1K	5%	1/2W (EXCEPT NEZ3: US, CND)
R386	1-260-087-11	CARBON	100	5%	1/2W (EXCEPT NEZ3: US, CND/NEZ5)
R386	1-260-320-11	CARBON	220	5%	1/2W (EXCEPT NEZ3/NEZ5: AEP, UK, EE, RU)
R386	1-260-095-11	CARBON	470	5%	1/2W (NEZ3: US, CND/NEZ5: AEP, UK, EE, RU)
R387	1-216-833-11	METAL CHIP	10K	5%	1/10W
R388	1-216-833-11	METAL CHIP	10K	5%	1/10W
R389	1-216-833-11	METAL CHIP	10K	5%	1/10W
R390	1-216-845-11	METAL CHIP	100K	5%	1/10W
R501	1-216-821-11	METAL CHIP	1K	5%	1/10W
R502	1-216-841-11	METAL CHIP	47K	5%	1/10W
R503	1-216-817-11	METAL CHIP	470	5%	1/10W
R504	1-216-841-11	METAL CHIP	47K	5%	1/10W
R505	1-216-841-11	METAL CHIP	47K	5%	1/10W
R506	1-216-821-11	METAL CHIP	1K	5%	1/10W
R507	1-216-833-11	METAL CHIP	10K	5%	1/10W
R508	1-216-817-11	METAL CHIP	470	5%	1/10W
R509	1-216-841-11	METAL CHIP	47K	5%	1/10W
R511	1-216-837-11	METAL CHIP	22K	5%	1/10W
R512	1-216-837-11	METAL CHIP	22K	5%	1/10W
R514	1-216-833-11	METAL CHIP	10K	5%	1/10W
⚠R515	1-216-373-81	METAL OXIDE	2.2	5%	2W F
⚠R516	1-216-373-81	METAL OXIDE	2.2	5%	2W F
R517	1-216-841-11	METAL CHIP	47K	5%	1/10W
R518	1-216-841-11	METAL CHIP	47K	5%	1/10W
R521	1-216-833-11	METAL CHIP	10K	5%	1/10W
R523	1-216-805-11	METAL CHIP	47	5%	1/10W (EXCEPT NEZ3/NEZ5: AEP, UK, EE, RU)
R523	1-216-809-11	METAL CHIP	100	5%	1/10W (EXCEPT NEZ3: US, CND/NEZ5)
R523	1-216-813-11	METAL CHIP	220	5%	1/10W (NEZ3: US, CND)
R523	1-216-864-11	SHORT CHIP	0 (NEZ5: AEP, UK, EE, RU)		
R524	1-216-805-11	METAL CHIP	47	5%	1/10W (EXCEPT NEZ3/NEZ5: AEP, UK, EE, RU)
R524	1-216-809-11	METAL CHIP	100	5%	1/10W (EXCEPT NEZ3: US, CND/NEZ5)
R524	1-216-813-11	METAL CHIP	220	5%	1/10W (NEZ3: US, CND)
R524	1-216-864-11	SHORT CHIP	0 (NEZ5: AEP, UK, EE, RU)		
		< TRANSFORMER >			
T301	1-443-760-11	TRANSFORMER, BIAS OSCILLATION			

****

The components identified by mark ⚠ or dotted line with mark ⚠ are critical for safety. Replace only with part number specified.	Les composants identifiés par une marque ⚠ sont critiques pour la sécurité. Ne les remplacer que par une pièce portant le numéro spécifié.

PANEL

Ref. No.	Part No.	Description			Remark
	A-1095-891-A	PANEL BOARD, COMPLETE (NEZ3: US, CND)			
	A-1095-895-A	PANEL BOARD, COMPLETE			(NEZ3: AEP, UK, EE, RU)
	A-1095-922-A	PANEL BOARD, COMPLETE			(NEZ3: SP, TW, KR, AUS)
	A-1095-933-A	PANEL BOARD, COMPLETE			(NEZ5: AEP, UK, EE, RU)
	A-1095-971-A	PANEL BOARD, COMPLETE (for SILVER)			(NEZ5: SP, TW, KR)
	A-1098-688-A	PANEL BOARD, COMPLETE			(NEZ3: E, E51, MX, AR)
	A-1098-754-A	PANEL BOARD, COMPLETE			(NEZ5: E, E51, MX, AR)
	A-1099-172-A	PANEL BOARD, COMPLETE (NEZ3: EA)			
	A-1099-813-A	PANEL BOARD, COMPLETE (NEZ5: CND)			
	A-1099-837-A	PANEL BOARD, COMPLETE (for WHITE)			(NEZ5: SP, KR)
		**********			
	2-581-391-01	PLATE, LIGHT GUIDE			
	2-594-335-01	HOLDER (LCD-C)			
		< CAPACITOR >			
C1701	1-107-726-91	CERAMIC CHIP	0.01uF	10%	16V (NEZ5)
C1702	1-107-726-91	CERAMIC CHIP	0.01uF	10%	16V (NEZ5)
C1801	1-124-234-00	ELECT	22uF	20%	16V
C1803	1-107-726-91	CERAMIC CHIP	0.01uF	10%	16V
C1804	1-107-726-91	CERAMIC CHIP	0.01uF	10%	16V
C1805	1-164-360-11	CERAMIC CHIP	0.1uF		16V
C1806	1-107-726-91	CERAMIC CHIP	0.01uF	10%	16V
C1807	1-126-518-11	ELECT	470uF	20%	4V
C1808	1-124-589-11	ELECT	47uF	20%	16V
C1809	1-124-234-00	ELECT	22uF	20%	16V
C1810	1-107-726-91	CERAMIC CHIP	0.01uF	10%	16V
C1811	1-126-157-11	ELECT	10uF	20%	16V
C1815	1-107-726-91	CERAMIC CHIP	0.01uF	10%	16V
C1816	1-107-726-91	CERAMIC CHIP	0.01uF	10%	16V
C1817	1-164-360-11	CERAMIC CHIP	0.1uF		16V
C1818	1-126-518-11	ELECT	470uF	20%	4V
C1819	1-162-923-11	CERAMIC CHIP	47PF	5%	50V
C1820	1-162-923-11	CERAMIC CHIP	47PF	5%	50V
C1821	1-164-816-11	CERAMIC CHIP	220PF	2%	50V
C1822	1-162-919-11	CERAMIC CHIP	22PF	5%	50V
C1823	1-107-726-91	CERAMIC CHIP	0.01uF	10%	16V
C1826	1-164-360-11	CERAMIC CHIP	0.1uF		16V
C1827	1-164-360-11	CERAMIC CHIP	0.1uF		16V
C1828	1-164-360-11	CERAMIC CHIP	0.1uF		16V
C1829	1-107-726-91	CERAMIC CHIP	0.01uF	10%	16V
C1830	1-126-157-11	ELECT	10uF	20%	16V
C1831	1-164-360-11	CERAMIC CHIP	0.1uF		16V
C1832	1-164-360-11	CERAMIC CHIP	0.1uF		16V
C1833	1-107-726-91	CERAMIC CHIP	0.01uF	10%	16V
C1834	1-107-726-91	CERAMIC CHIP	0.01uF	10%	16V
C1859	1-124-259-11	ELECT	4.7uF	20%	50V
C1860	1-126-157-11	ELECT	10uF	20%	16V
C1861	1-107-726-91	CERAMIC CHIP	0.01uF	10%	16V
C1864	1-107-726-91	CERAMIC CHIP	0.01uF	10%	16V

Ref. No.	Part No.	Description	Remark
		< CONNECTOR >	
* CN1805	1-566-970-11	HOUSING, CONNECTOR (PC BOARD) 8P	
		< DIODE >	
D1801	8-719-988-61	DIODE 1SS355TE-17	
D1804	6-501-139-01	LED SELU2B10A-SLF62 (LCD BACK LIGHT)	(NEZ3)
D1804	6-501-250-01	LED SELU2WA10C-B56-LF62	(LCD BACK LIGHT) (NEZ5)
D1805	6-501-139-01	LED SELU2B10A-SLF62 (LCD BACK LIGHT)	(NEZ3)
D1805	6-501-250-01	LED SELU2WA10C-B56-LF62	(LCD BACK LIGHT) (NEZ5)
D1806	8-719-063-93	LED SLR325VC-N-T32 (STANDBY)	
D1808	8-719-988-61	DIODE 1SS355TE-17	
D1809	8-719-000-07	DIODE MC2836	
D1898	8-719-000-07	DIODE MC2836	
D1899	8-719-000-07	DIODE MC2836	
		< FLAT TYPE WIRE >	
FFC1801	1-830-583-11	WIRE (FLAT TYPE) (7 CORE)	
FFC1803	1-830-579-11	WIRE (FLAT TYPE) (9 CORE)	
FFC1804	1-830-580-11	WIRE (FLAT TYPE) (15 CORE)	(NEZ5: AEP, UK, EE, RU)
FFC1804	1-830-581-11	WIRE (FLAT TYPE) (13 CORE)	(EXCEPT NEZ5: AEP, UK, EE, RU)
FFC1805	1-830-582-11	WIRE (FLAT TYPE) (19 CORE)	
		< IC >	
IC1801	6-805-582-01	IC M30620FCPFP	
IC1802	6-600-349-21	IC NJL23H400A	
IC1803	8-759-713-61	IC PST3429UL	
		< JUMPER RESISTOR >	
JR1805	1-216-864-11	SHORT CHIP 0	
JR1817	1-216-296-11	SHORT CHIP 0	
JR1818	1-216-296-11	SHORT CHIP 0	
JR1819	1-216-864-11	SHORT CHIP 0	
JR1820	1-216-296-11	SHORT CHIP 0	
JR1821	1-216-864-11	SHORT CHIP 0	
JR1822	1-216-864-11	SHORT CHIP 0	
JR1823	1-216-296-11	SHORT CHIP 0	
JR1824	1-216-296-11	SHORT CHIP 0	
JR1827	1-216-864-11	SHORT CHIP 0	
JR1831	1-216-864-11	SHORT CHIP 0	
JR1832	1-216-296-11	SHORT CHIP 0	
JR1836	1-216-864-11	SHORT CHIP 0	
		< LIQUID CRYSTAL DISPLAY >	
LCD1801	1-805-843-11	DISPLAY PANEL, LIQUID CRYSTAL	(NEZ3/NEZ5 (WHITE): SP, KR)
LCD1801	1-805-843-21	DISPLAY PANEL, LIQUID CRYSTAL	(NEZ5 (SILVER): CND, AEP, UK, EE, RU, E, E51, MX, TW, AR, SP, KR)
		< TRANSISTOR >	
Q1801	8-729-120-28	TRANSISTOR 2SC1623-L5L6	
Q1802	8-729-037-13	TRANSISTOR KTA1271Y	
Q1803	8-729-027-43	TRANSISTOR DTC114EKA-T146	

PANEL

Ref. No.	Part No.	Description			Remark
Q1804	8-729-037-13	TRANSISTOR	KTA1271Y		
Q1805	8-729-027-43	TRANSISTOR	DTC114EKA-T146		
Q1806	8-729-027-43	TRANSISTOR	DTC114EKA-T146		
Q1807	8-729-120-28	TRANSISTOR	2SC1623-L5L6		
Q1808	8-729-027-43	TRANSISTOR	DTC114EKA-T146		
Q1809	8-729-027-31	TRANSISTOR	DTA124EKA-T146		
Q1810	8-729-027-31	TRANSISTOR	DTA124EKA-T146		
Q1811	8-729-027-43	TRANSISTOR	DTC114EKA-T146		
		< RESISTOR >			
R1701	1-216-813-11	METAL CHIP	220	5%	1/10W (NEZ5)
R1701	1-216-817-11	METAL CHIP	470	5%	1/10W (NEZ3)
R1702	1-216-817-11	METAL CHIP	470	5%	1/10W (NEZ3)
R1702	1-216-821-11	METAL CHIP	1K	5%	1/10W (NEZ5)
R1703	1-216-813-11	METAL CHIP	220	5%	1/10W (NEZ5)
R1703	1-216-817-11	METAL CHIP	470	5%	1/10W (NEZ3)
R1704	1-216-817-11	METAL CHIP	470	5%	1/10W (NEZ3)
R1704	1-216-821-11	METAL CHIP	1K	5%	1/10W (NEZ5)
R1707	1-216-845-11	METAL CHIP	100K	5%	1/10W
R1708	1-216-825-11	METAL CHIP	2.2K	5%	1/10W (NEZ3: US, CND, AEP, UK, EE, RU/ NEZ5: CND, AEP, UK, EE, RU)
R1708	1-216-829-11	METAL CHIP	4.7K	5%	1/10W (NEZ3: SP, TW, KR, AUS/NEZ5: SP, TW, KR)
R1708	1-216-837-11	METAL CHIP	22K	5%	1/10W (NEZ3: E, E51, MX, AR/NEZ5: E, E51, MX, AR)
R1708	1-216-841-11	METAL CHIP	47K	5%	1/10W (NEZ3: EA)
R1709	1-216-833-11	METAL CHIP	10K	5%	1/10W (EXCEPT NEZ3: AEP, UK, EE, RU)
R1711	1-216-809-11	METAL CHIP	100	5%	1/10W (NEZ5)
R1711	1-216-813-11	METAL CHIP	220	5%	1/10W (NEZ3)
R1801	1-216-809-11	METAL CHIP	100	5%	1/10W
R1802	1-216-809-11	METAL CHIP	100	5%	1/10W
R1803	1-216-809-11	METAL CHIP	100	5%	1/10W
R1804	1-216-809-11	METAL CHIP	100	5%	1/10W
R1805	1-216-857-11	METAL CHIP	1M	5%	1/10W
R1806	1-216-821-11	METAL CHIP	1K	5%	1/10W
R1807	1-216-809-11	METAL CHIP	100	5%	1/10W
R1808	1-216-809-11	METAL CHIP	100	5%	1/10W
R1810	1-216-809-11	METAL CHIP	100	5%	1/10W
R1811	1-216-809-11	METAL CHIP	100	5%	1/10W
R1812	1-216-809-11	METAL CHIP	100	5%	1/10W
R1813	1-216-809-11	METAL CHIP	100	5%	1/10W
R1814	1-216-809-11	METAL CHIP	100	5%	1/10W
R1815	1-216-821-11	METAL CHIP	1K	5%	1/10W
R1816	1-216-809-11	METAL CHIP	100	5%	1/10W
R1817	1-216-841-11	METAL CHIP	47K	5%	1/10W
R1818	1-216-849-11	METAL CHIP	220K	5%	1/10W
R1819	1-216-833-11	METAL CHIP	10K	5%	1/10W
R1820	1-216-845-11	METAL CHIP	100K	5%	1/10W
R1821	1-216-833-11	METAL CHIP	10K	5%	1/10W
R1822	1-216-809-11	METAL CHIP	100	5%	1/10W
R1823	1-216-845-11	METAL CHIP	100K	5%	1/10W
R1824	1-216-809-11	METAL CHIP	100	5%	1/10W
R1825	1-216-809-11	METAL CHIP	100	5%	1/10W
R1826	1-216-809-11	METAL CHIP	100	5%	1/10W
R1827	1-216-809-11	METAL CHIP	100	5%	1/10W
R1828	1-216-809-11	METAL CHIP	100	5%	1/10W
R1829	1-216-833-11	METAL CHIP	10K	5%	1/10W
R1830	1-216-829-11	METAL CHIP	4.7K	5%	1/10W
R1831	1-216-845-11	METAL CHIP	100K	5%	1/10W
R1832	1-216-809-11	METAL CHIP	100	5%	1/10W
R1833	1-216-809-11	METAL CHIP	100	5%	1/10W
R1834	1-216-809-11	METAL CHIP	100	5%	1/10W
R1835	1-216-809-11	METAL CHIP	100	5%	1/10W
R1836	1-216-809-11	METAL CHIP	100	5%	1/10W
R1837	1-216-809-11	METAL CHIP	100	5%	1/10W
R1838	1-216-809-11	METAL CHIP	100	5%	1/10W
R1839	1-216-809-11	METAL CHIP	100	5%	1/10W
R1840	1-216-833-11	METAL CHIP	10K	5%	1/10W
R1841	1-216-821-11	METAL CHIP	1K	5%	1/10W
R1842	1-216-833-11	METAL CHIP	10K	5%	1/10W
R1843	1-216-833-11	METAL CHIP	10K	5%	1/10W
R1844	1-216-837-11	METAL CHIP	22K	5%	1/10W
R1845	1-216-833-11	METAL CHIP	10K	5%	1/10W
R1846	1-216-829-11	METAL CHIP	4.7K	5%	1/10W
R1847	1-216-829-11	METAL CHIP	4.7K	5%	1/10W
R1848	1-216-829-11	METAL CHIP	4.7K	5%	1/10W
R1849	1-216-829-11	METAL CHIP	4.7K	5%	1/10W
R1850	1-216-821-11	METAL CHIP	1K	5%	1/10W
R1851	1-216-825-11	METAL CHIP	2.2K	5%	1/10W
R1852	1-216-821-11	METAL CHIP	1K	5%	1/10W
R1853	1-216-825-11	METAL CHIP	2.2K	5%	1/10W
R1854	1-216-864-11	SHORT CHIP	0		
R1855	1-216-833-11	METAL CHIP	10K	5%	1/10W
R1856	1-216-853-11	METAL CHIP	470K	5%	1/10W
R1857	1-216-833-11	METAL CHIP	10K	5%	1/10W
R1858	1-216-833-11	METAL CHIP	10K	5%	1/10W
R1859	1-216-841-11	METAL CHIP	47K	5%	1/10W
R1860	1-216-841-11	METAL CHIP	47K	5%	1/10W
R1861	1-216-837-11	METAL CHIP	22K	5%	1/10W
R1862	1-216-809-11	METAL CHIP	100	5%	1/10W
R1863	1-216-809-11	METAL CHIP	100	5%	1/10W
R1866	1-216-809-11	METAL CHIP	100	5%	1/10W
R1867	1-216-809-11	METAL CHIP	100	5%	1/10W
R1869	1-216-833-11	METAL CHIP	10K	5%	1/10W
R1871	1-216-833-11	METAL CHIP	10K	5%	1/10W
R1872	1-216-821-11	METAL CHIP	1K	5%	1/10W
R1873	1-216-825-11	METAL CHIP	2.2K	5%	1/10W
R1874	1-216-825-11	METAL CHIP	2.2K	5%	1/10W
R1875	1-216-829-11	METAL CHIP	4.7K	5%	1/10W
R1876	1-216-829-11	METAL CHIP	4.7K	5%	1/10W (EXCEPT NEZ3: US, CND)
R1877	1-216-833-11	METAL CHIP	10K	5%	1/10W (EXCEPT NEZ3: US, CND)
R1878	1-216-833-11	METAL CHIP	10K	5%	1/10W
R1879	1-216-821-11	METAL CHIP	1K	5%	1/10W

PANEL **SHIELD**

Ref. No.	Part No.	Description			Remark
R1880	1-216-825-11	METAL CHIP	2.2K	5%	1/10W
R1881	1-216-825-11	METAL CHIP	2.2K	5%	1/10W
R1882	1-216-829-11	METAL CHIP	4.7K	5%	1/10W
R1883	1-216-829-11	METAL CHIP	4.7K	5%	1/10W
R1884	1-216-825-11	METAL CHIP	2.2K	5%	1/10W
R1885	1-216-825-11	METAL CHIP	2.2K	5%	1/10W
R1886	1-216-809-11	METAL CHIP	100	5%	1/10W
R1887	1-216-809-11	METAL CHIP	100	5%	1/10W
R1888	1-216-829-11	METAL CHIP	4.7K	5%	1/10W
R1889	1-216-829-11	METAL CHIP	4.7K	5%	1/10W
R1892	1-216-809-11	METAL CHIP	100	5%	1/10W
R1893	1-216-833-11	METAL CHIP	10K	5%	1/10W
R1894	1-216-833-11	METAL CHIP	10K	5%	1/10W
		< ROTALY ENCODER >			
RV1801	1-479-195-11	ENCODER (VOLUME)			
		< SWITCH >			
S1801	1-786-050-21	SWITCH, KEY BOARD (I/⏻)			
S1802	1-786-050-21	SWITCH, KEY BOARD (DSGX)			
S1803	1-786-050-21	SWITCH, KEY BOARD (CD SYNC)			
S1804	1-786-050-21	SWITCH, KEY BOARD (● PAUSE/START)			
S1805	1-786-050-21	SWITCH, KEY BOARD (PLAY MODE/TUNING MODE)			
S1806	1-786-050-21	SWITCH, KEY BOARD (🗀+) (EXCEPT NEZ3: US, CND)			
S1807	1-786-050-21	SWITCH, KEY BOARD (🗀–) (EXCEPT NEZ3: US, CND)			
S1808	1-786-050-21	SWITCH, KEY BOARD (TAPE ▶)			
S1809	1-786-050-21	SWITCH, KEY BOARD (CD ▶II)			
S1810	1-786-050-21	SWITCH, KEY BOARD (TUNER/BAND)			
S1811	1-786-050-21	SWITCH, KEY BOARD (■)			
S1812	1-786-050-21	SWITCH, KEY BOARD (TUNING –, I◁◁ ◀◀)			
S1813	1-786-050-21	SWITCH, KEY BOARD (TUNING +, ▶▶ ▷▷I)			
		< VIBRATOR >			
X1801	1-579-463-11	VIBRATOR, CRYSTAL (32.768kHz)			
X1802	1-795-482-11	VIBRATOR, CERAMIC (10MHz)			

****

	A-1101-746-A	SHIELD BOARD, COMPLETE (EXCEPT NEZ3: AEP, UK, EE, RU, KR/NEZ5: AEP, UK, EE, RU, KR)
		**********

****

MISCELLANEOUS
****

Ref. No.	Part No.	Description	Remark
55	1-796-352-71	DECK, MECHANICAL (CMAL5Z231)	
152	1-452-899-11	MAGNET	
⚠160	8-820-221-01	OPTICAL PICK-UP BLOCK KSM-213EDP/C2NP (Including spindle motor (M101), sled motor (M102))	
163	1-827-992-11	WIRE (FLAT TYPE) (16 CORE)	
164	1-830-585-11	WIRE (FLAT TYPE) (27 CORE)	
205	1-693-625-11	TUNER UNIT (NEZ3: US, CND/NEZ5: CND)	
205	1-693-626-11	TUNER UNIT (NEZ5: AEP, UK, EE, RU)	
205	1-693-628-11	TUNER UNIT (NEZ3: E, E51, EA, MX, SP, TW, AR, AUS/NEZ5: E, E51, MX, SP, TW, AR)	
205	1-693-629-11	TUNER UNIT (NEZ3: AEP, UK, EE, RU, KR/NEZ5: KR)	
206	1-769-946-11	WIRE (FLAT TYPE) (11 CORE) (EXCEPT NEZ5: AEP, UK, EE, RU)	
206	1-773-011-11	WIRE (FLAT TYPE) (15 CORE) (NEZ5: AEP, UK, EE, RU)	
⚠208	1-769-079-41	CORD, POWER (NEZ3: KR/NEZ5: KR)	
⚠208	1-769-744-81	CORD, POWER (NEZ3: UK, EA/NEZ5: UK, EE, RU)	
⚠208	1-775-790-12	CORD, POWER (NEZ3: AUS)	
⚠208	1-827-226-31	CORD, POWER (NEZ3: E, MX/NEZ5: E, MX)	
⚠208	1-827-597-31	CORD, POWER (NEZ3: TW/NEZ5: TW)	
⚠208	1-829-387-11	CORD, POWER (NEZ3: AR/NEZ5: AR)	
⚠208	1-830-188-11	CORD, POWER (NEZ3: AEP, E51, EE, RU, SP/NEZ5: AEP, E51, EE, RU, SP)	
⚠208	1-830-190-11	CORD, POWER (NEZ3: US, CND/NEZ5: CND)	
M301	1-787-103-11	FAN, DC (NEZ5)	
S101	1-771-853-11	SWITCH, DETECTION (LIMIT)	
S1820	1-692-960-21	SWITCH, PUSH (1 KEY) (CD LID OPEN/CLOSE DETECT)	
⚠T902	1-443-565-11	TRANSFORMER, POWER (NEZ5: CND)	
⚠T902	1-443-566-11	TRANSFORMER, POWER (NEZ5: AEP, UK, EE, RU)	
⚠T902	1-443-567-11	TRANSFORMER, POWER (NEZ5: E, E51, MX, TW, AR, SP, KR)	
⚠T902	1-443-573-11	TRANSFORMER, POWER (NEZ3: AEP, UK, EE, RU)	
⚠T902	1-443-574-11	TRANSFORMER, POWER (NEZ3: E, E51, MX, SP, TW, AR, KR, AUS)	
⚠T902	1-443-626-11	TRANSFORMER, POWER (NEZ3: US, CND)	
⚠T902	1-443-738-11	POWER TRANSFORMER (NEZ3: EA)	

****

ACCESSORIES
****

⚠	1-770-019-51	ADAPTOR, CONVERSION PLUG (NEZ3: UK, EA/NEZ5: UK)
⚠	1-573-856-12	ADAPTOR, CONVERSION 2P (NEZ5: E)
⚠	1-569-007-11	ADAPTOR, CONVERSION 2P (NEZ3: E51, SP/NEZ5: E51, SP)

The components identified by mark ⚠ or dotted line with mark ⚠ are critical for safety. Replace only with part number specified.	Les composants identifiés par une marque ⚠ sont critiques pour la sécurité. Ne les remplacer que par une pièce portant le numéro spécifié.

HCD-NEZ3/NEZ5

SONY

SERVICE MANUAL

Ver. 1.2 2005.09

US Model
Australian Model
HCD-NEZ3
Canadian Model
AEP Model
UK Model
E Model
HCD-NEZ3/NEZ5

SUPPLEMENT-1

File this supplement with the service manual.

Subject: Change of specifications

Changing Destination

HCD-NEZ3 : US, Canadian, AEP, UK, East European, Russian models
HCD-NEZ5 : AEP, UK, East European, Russian models

In this set, specification have been changed in the midway of production.
Only information on a new type has been described in this supplement-1.
Refer to original service manual for other information.
Also, repair after confirming the type by discrimination without fail, because there is no interchangeability between new type and former type.

TABLE OF CONTENTS

1. NEW/FORMER TYPE DISCRIMINATION 2

2. DISASSEMBLY
2-1. Disassembly Flow 3
2-2. Cabinet 3
2-3. Cabinet (Top) Section 4
2-4. Base Unit (BU-K8BD83S-WOD) 4
2-5. Front Panel Section 5
2-6. Mechanical Deck (CMAL5Z231) 5
2-7. MAIN Board 6
2-8. Tuner Unit 6

3. ELECTRICAL ADJUSTMENTS 7

4. DIAGRAMS
4-1. Block Diagram – CD SERVO Section – 9
4-2. Block Diagram – MAIN Section – 10
4-3. Printed Wiring Board – CD Board – 12
4-4. Schematic Diagram – CD Board – 13
4-5. Printed Wiring Boards – MAIN Section – 15
4-6. Schematic Diagram – MAIN Section (1/2) – 16
4-7. Schematic Diagram – MAIN Section (2/2) – 17
4-8. Printed Wiring Board – PANEL Board – 18
4-9. Schematic Diagram – PANEL Board – 19
4-10. Printed Wiring Boards – DC Section – 20
4-11. Printed Wiring Board – AC Board – 21
4-12. Schematic Diagram – POWER SUPPLY Section – 22

5. EXPLODED VIEW
5-1. Cabinet Section 29
5-2. Mechanical Deck Section 30
5-3. Panel Board Section 31
5-4. Cabinet (Top) Section 32
5-5. MAIN Board Section 33
5-6. AC Board, DC Board Section 34

6. ELECTRICAL PARTS LIST 35

9-879-528-81

1. NEW/FORMER TYPE DISCRIMINATION

New/former type can be distinguished in the version display mode of the test mode.

Procedure:

1. Press the I/⏻ button to turn the power on.
2. While pressing the DSGX button, press the ⏮ button and turn the VOLUME knob in the counter-clock wise.
3. When this mode is activated, model and destination is displayed on the fluorescent indicator tube.
4. Press the DSGX button to display software version and year, month, day of the software creation display mode.
   Former type : ####V1XX
   New type : ####V2XX
   (#### :release date of software, XX :revision of version)
5. To release this mode, while pressing the ■ button, press the I/⏻ button and turn the VOLUME knob in the counter-clock wise.

- **Method to Distinguished by Serial No.**

The set since serial No. of the following table is new type.

Model	Destination	Serial No.
HCD-NEZ3	US	Since 8259876
	Canadian	Since 4119759
	AEP	Since 5147808
	UK	Since 6126228
	East European and Russian	Since 7120201
HCD-NEZ5	AEP	Since 5130981
	UK	Since 6103836
	East European and Russian	Since 7109341

2. DISASSEMBLY

- This set can be disassembled in the order shown below.

2-1. DISASSEMBLY FLOW

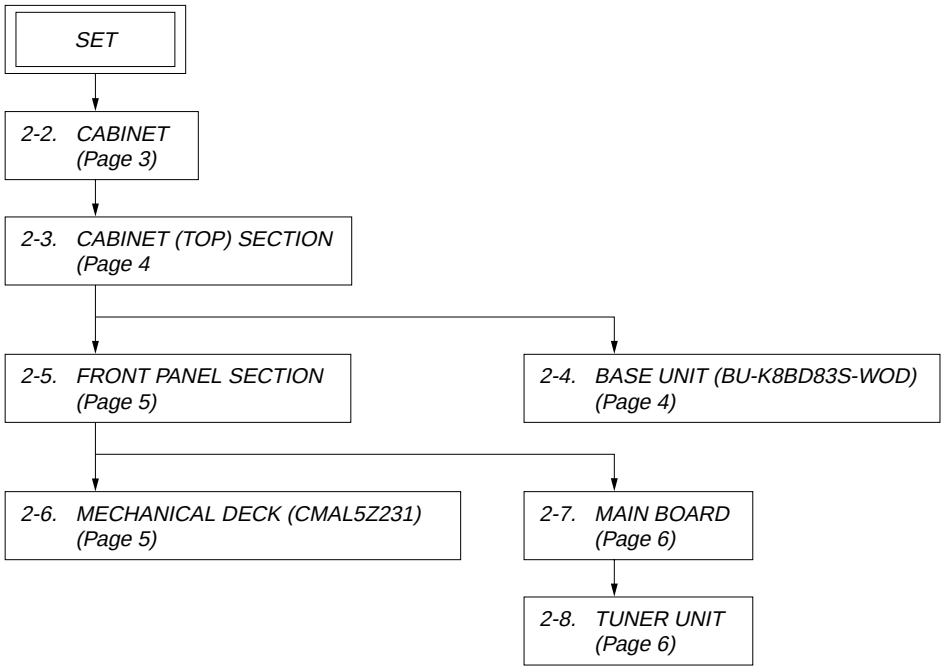

Note: Follow the disassembly procedure in the numerical order given.

2-2. CABINET

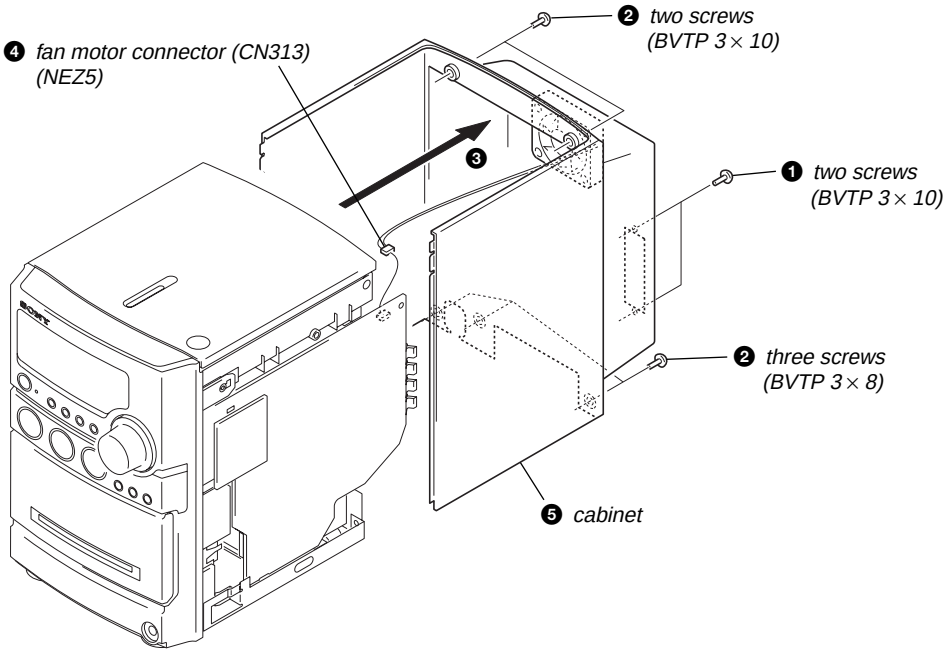

2-3. CABINET (TOP) SECTION

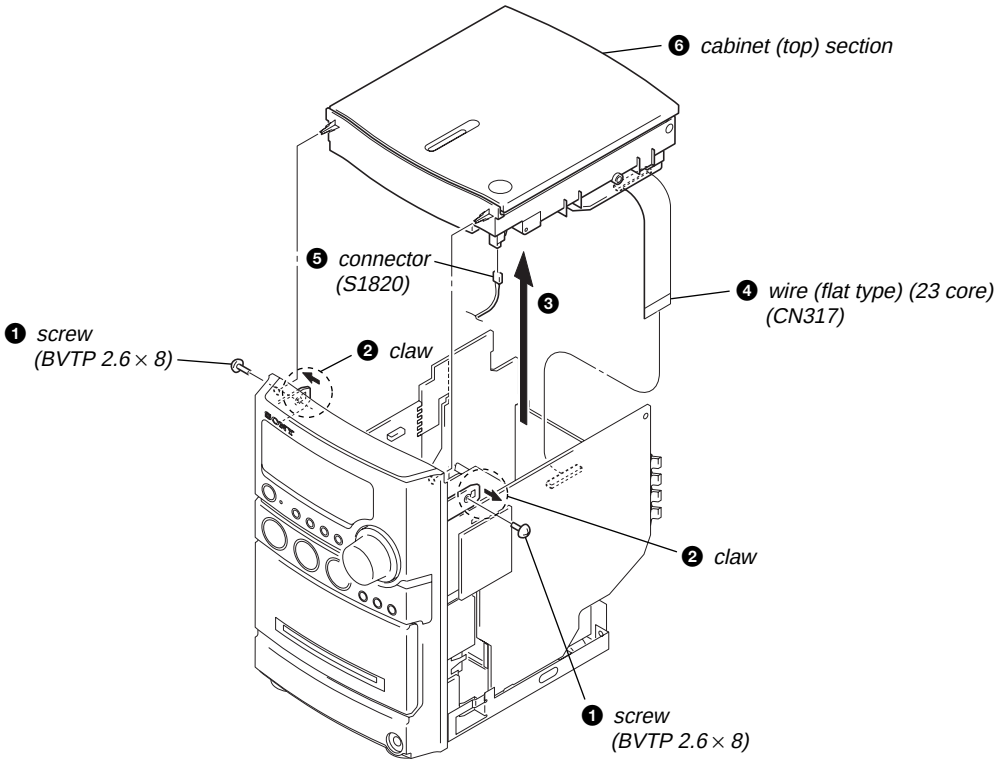

2-4. BASE UNIT (BU-K8BD83S-WOD)

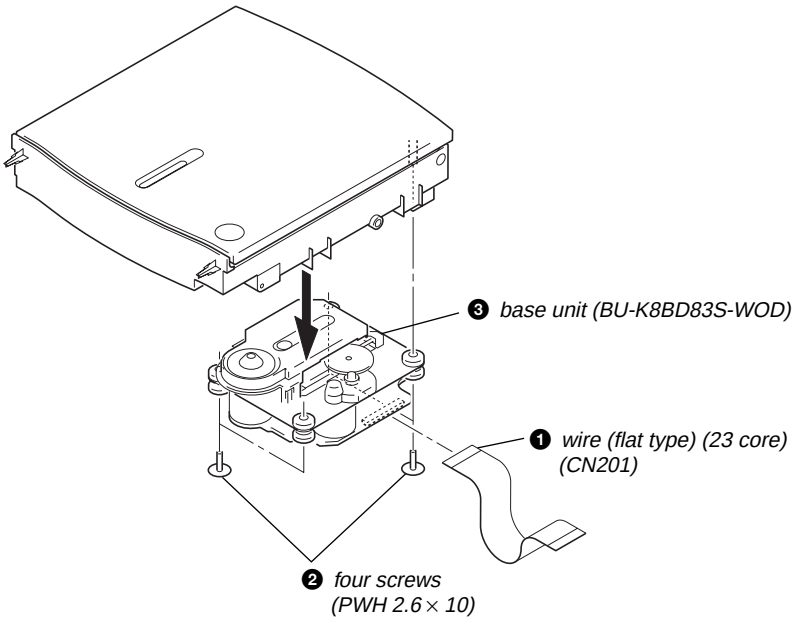

2-5. FRONT PANEL SECTION

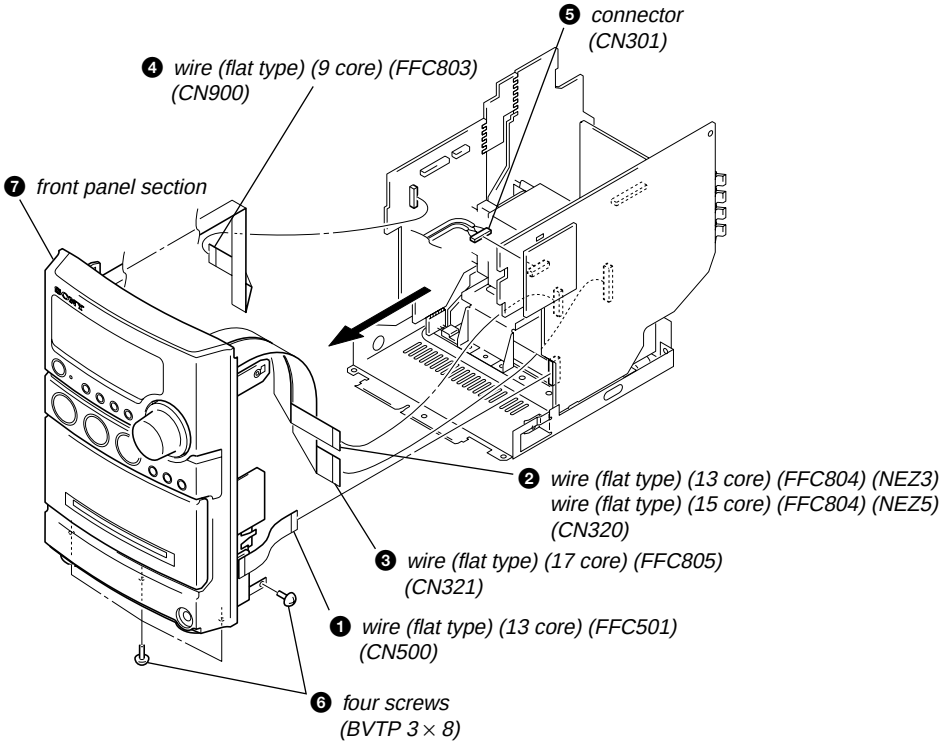

2-6. MECHANICAL DECK (CMAL5Z231)

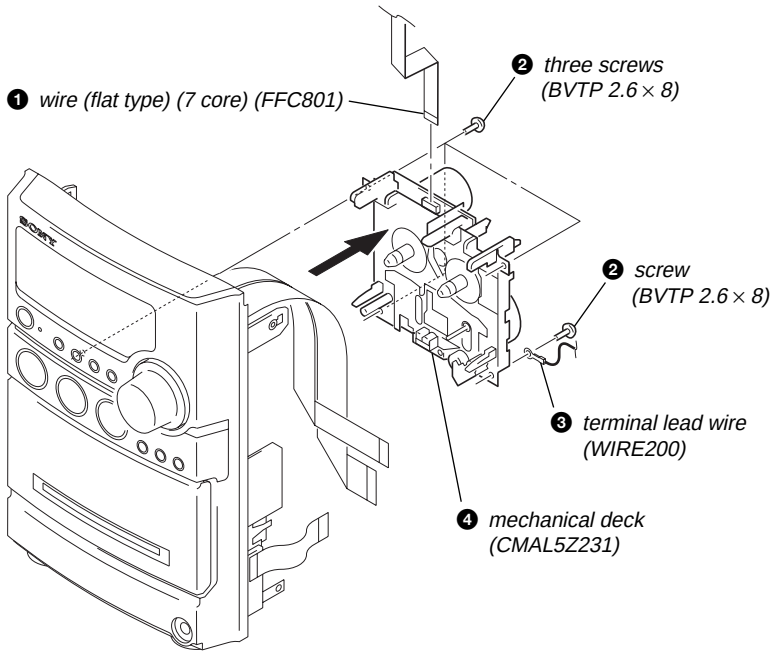

2-7. MAIN BOARD

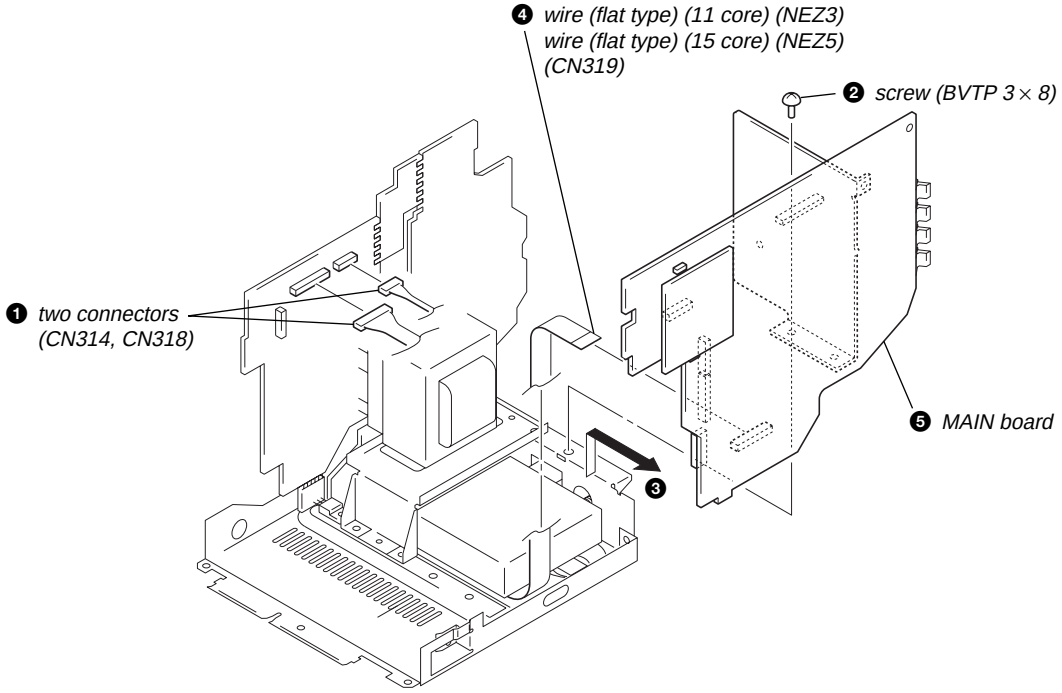

2-8. TUNER UNIT

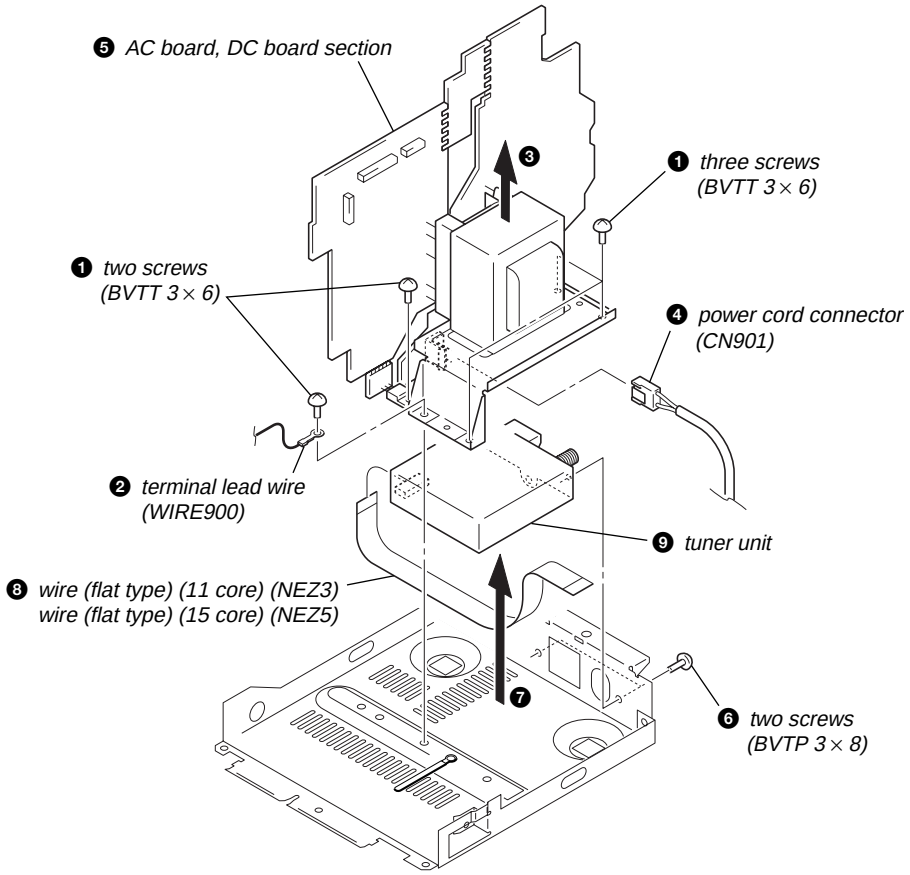

3. ELECTRICAL ADJUSTMENTS

DECK SECTION | 0 dB=0.775 V

1. Demagnetize the record/playback head with a head demagnetizer.
2. Do not use a magnetized screwdriver for the adjustments.

- **Test Tape**

Tape	Signal	Used for
P-4-A063	6.3 kHz, -10 dB	Azimuth Adjustment

RECORD/PLAYBACK HEAD AZIMUTH ADJUSTMENT

Note: Remove the cover (azimuth) before this adjustment.

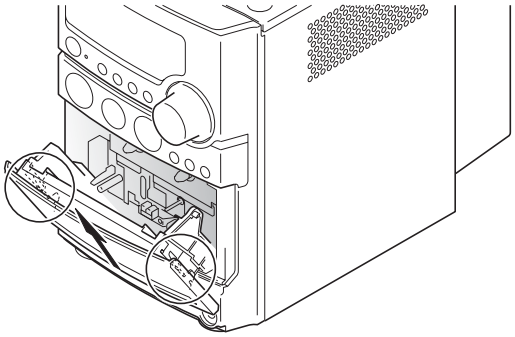

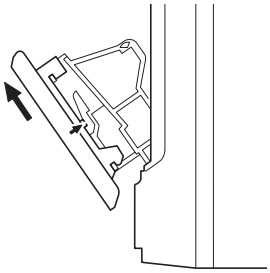

Procedure:

1. Mode: Playback

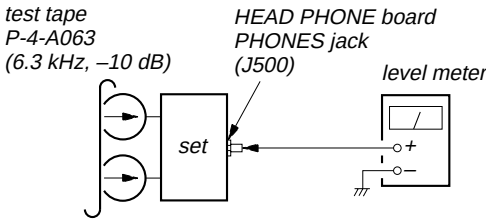

2. Turn the adjustment screw and check output peaks. If the peaks do not match for L-CH and R-CH, turn the adjustment screw so that outputs match within 1dB of peak.

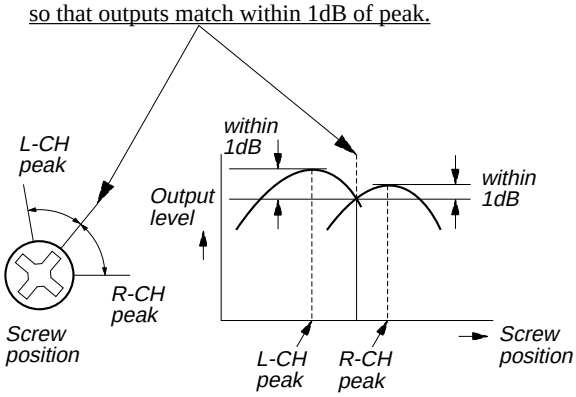

3. Mode: Playback

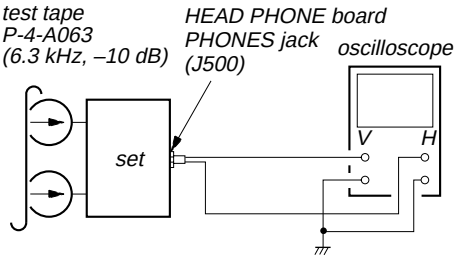

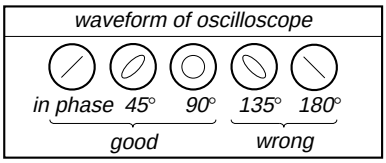

4. After the adjustments, apply suitable locking compound to the pats adjusted.

Adjustment Location: Record/Playback/Erase Head

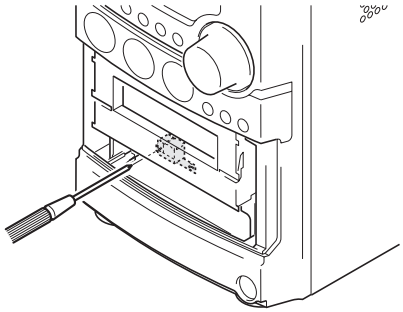

CD SECTION

Note:

1. CD Block is basically constructed to operate without adjustment.
2. Use YEDS-18 disc (3-702-101-01) unless otherwise indicated.
3. Use an oscilloscope with more than 10 MW impedance.
4. Clean the object lens by an applicator with neutral detergent when the signal level is low than specified value with the following checks.
5. Check the focus bias check when optical pick-up block is replaced.

FOCUS BIAS CHECK

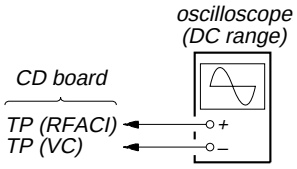

Procedure :

1. Connect oscilloscope to TP (RFACI) and TP (VC) on the CD board.
2. Press the I/⏻ button to turn the power ON.
3. Set disc (YEDS-18) on the tray and press the CD ▶II button to playback.
4. Confirm that oscilloscope waveform is as shown in the figure below. (eye pattern)
   A good eye pattern means that the diamond shape (◊) in the center of the waveform can be clearly distinguished.

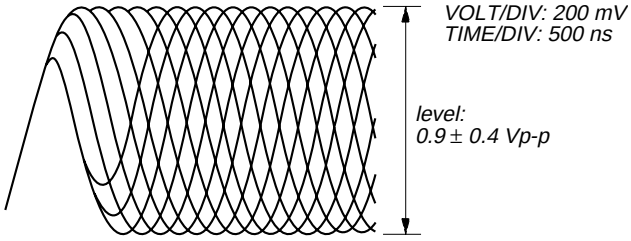

Checking Location:

– CD Board (Conductor Side) –

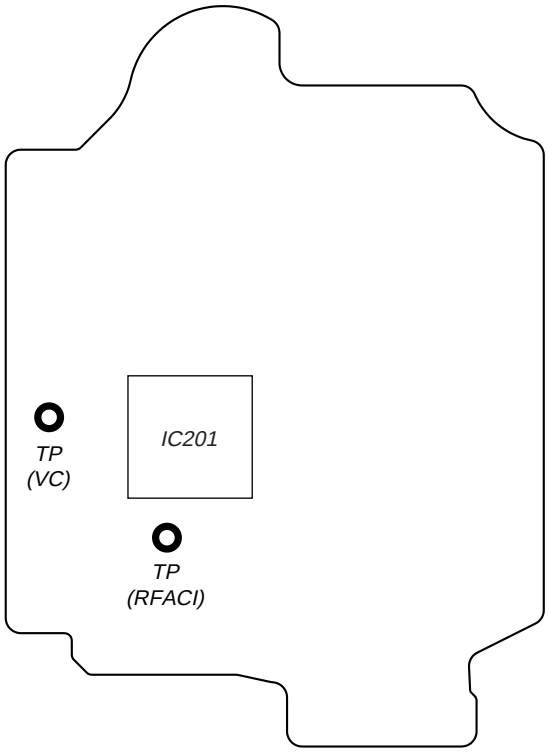

4. DIAGRAMS

4-1. BLOCK DIAGRAM – CD SERVO Section –

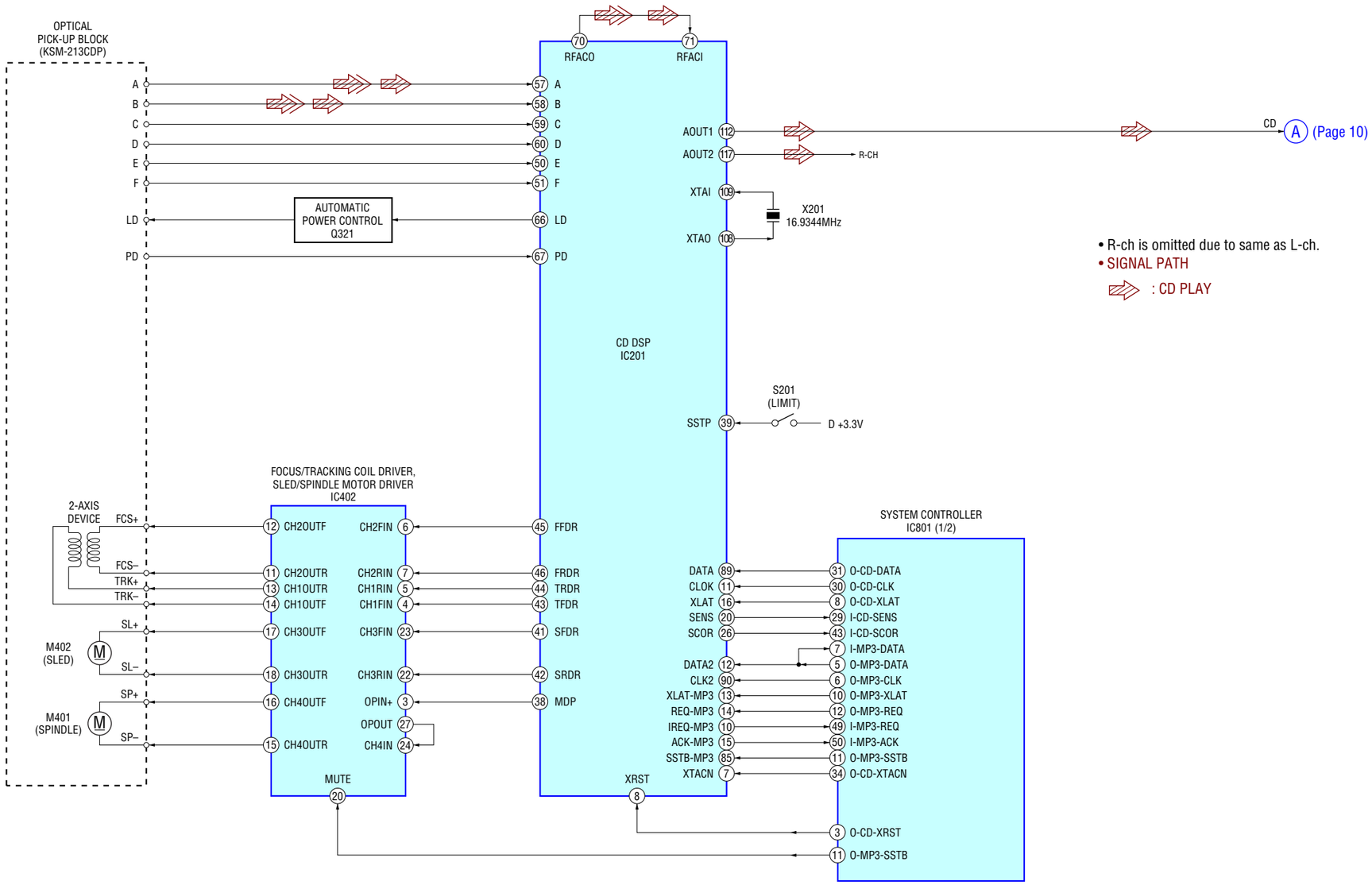

• R-ch is omitted due to same as L-ch.
• SIGNAL PATH
: CD PLAY

4-2. BLOCK DIAGRAM – MAIN Section –

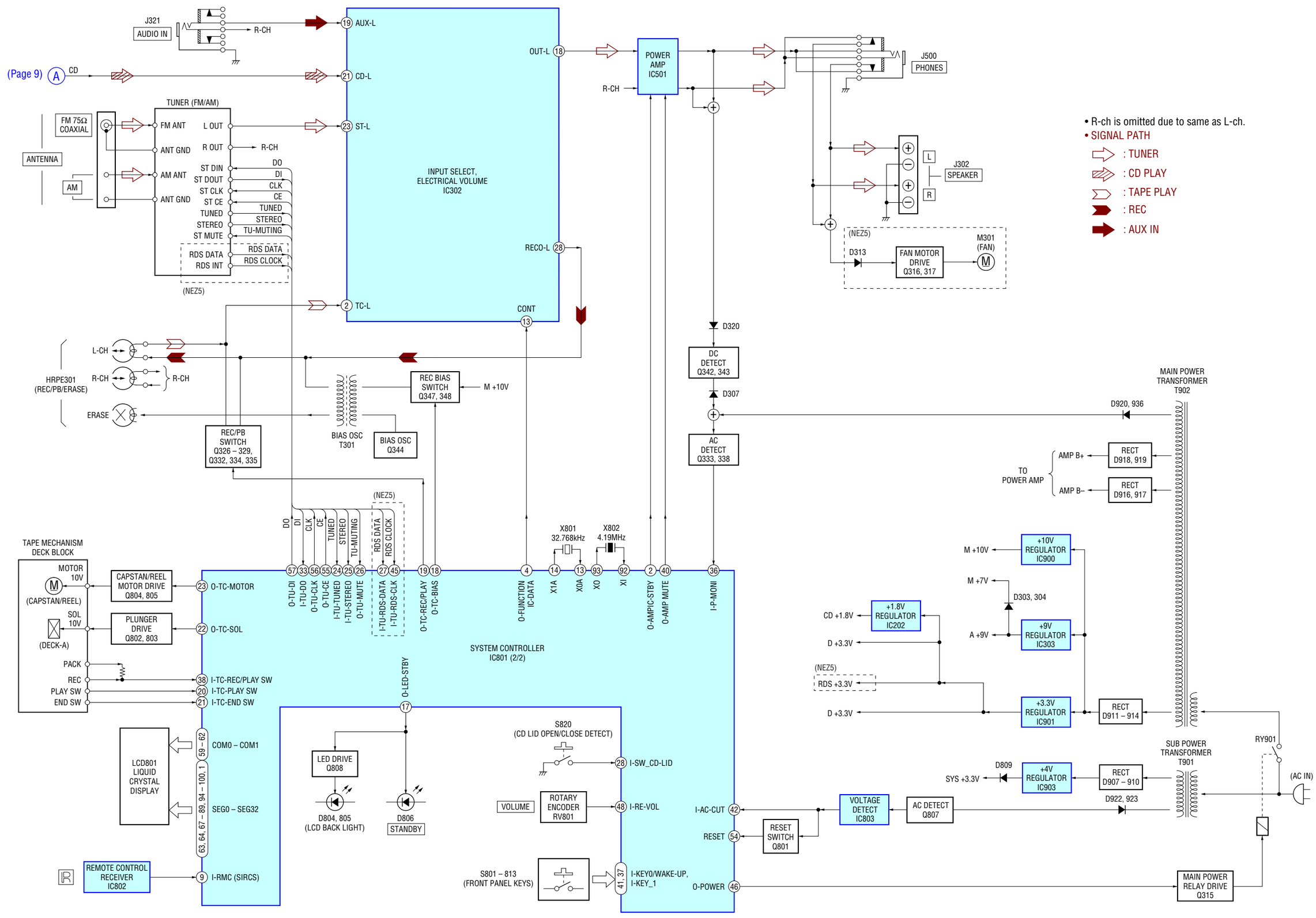

• Note for Printed Wiring Boards and Schematic Diagrams

Note on Printed Wiring Board:

- ○——— : parts extracted from the component side.
- ——— : parts extracted from the conductor side.
- △ : internal component.
- ▬ : Pattern from the side which enables seeing.

(The other layers' patterns are not indicated.)

Caution:	
Pattern face side: (Conductor Side)	Parts on the pattern face side seen from the pattern face are indicated.
Parts face side: (Component Side)	Parts on the parts face side seen from the parts face are indicated.

- Indication of transistor

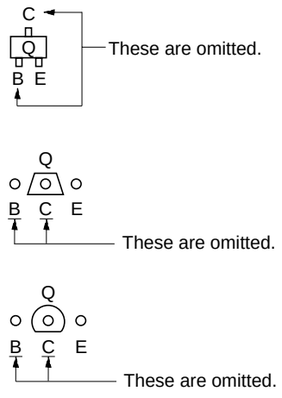

Note on Schematic Diagram:

- All capacitors are in µF unless otherwise noted. (p: pF) 50 WV or less are not indicated except for electrolytics and tantalums.
- All resistors are in Ω and 1/4 W or less unless otherwise specified.
- △ : internal component.
- : nonflammable resistor.
- : fusible resistor.
- ▭ : panel designation.

Note:	Note:
The components identified by mark ⚠ or dotted line with mark ⚠ are critical for safety. Replace only with part number specified.	Les composants identifiés par une marque ⚠ sont critiques pour la sécurité. Ne les remplacer que par une pièce portant le numéro spécifié.

- ▬▬ : B+ Line.
- ▬ ▬ ▬ : B– Line.
- Voltages and waveforms are dc with respect to ground under no-signal conditions.
  – CD Board –
  no mark : CD PLAY
  – Other Section –
  no mark : TUNER
  ( ) : CD PLAY
  《 》 : TAPE PLAY
  { } : REC
- Voltages are taken with a VOM (Input impedance 10 MΩ). Voltage variations may be noted due to normal production tolerances.
- Waveforms are taken with a oscilloscope. Voltage variations may be noted due to normal production tolerances.
- Circled numbers refer to waveforms.
- Signal path.
  ⇨ : TUNER
  ⇨ : CD PLAY
  ⇨ : TAPE PLAY
  ➡ : REC
  ➡ : AUX IN
- Abbreviation
  CND : Canadian model

• Circuit Boards Location

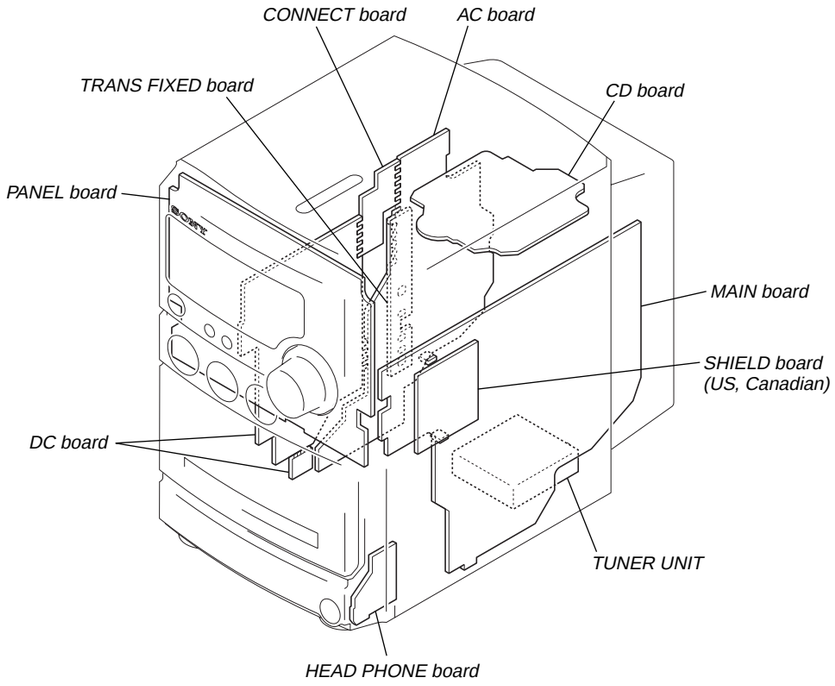

4-3. PRINTED WIRING BOARD – CD Board –

• See page 11 for Circuit Boards Location. : Uses unleaded solder.

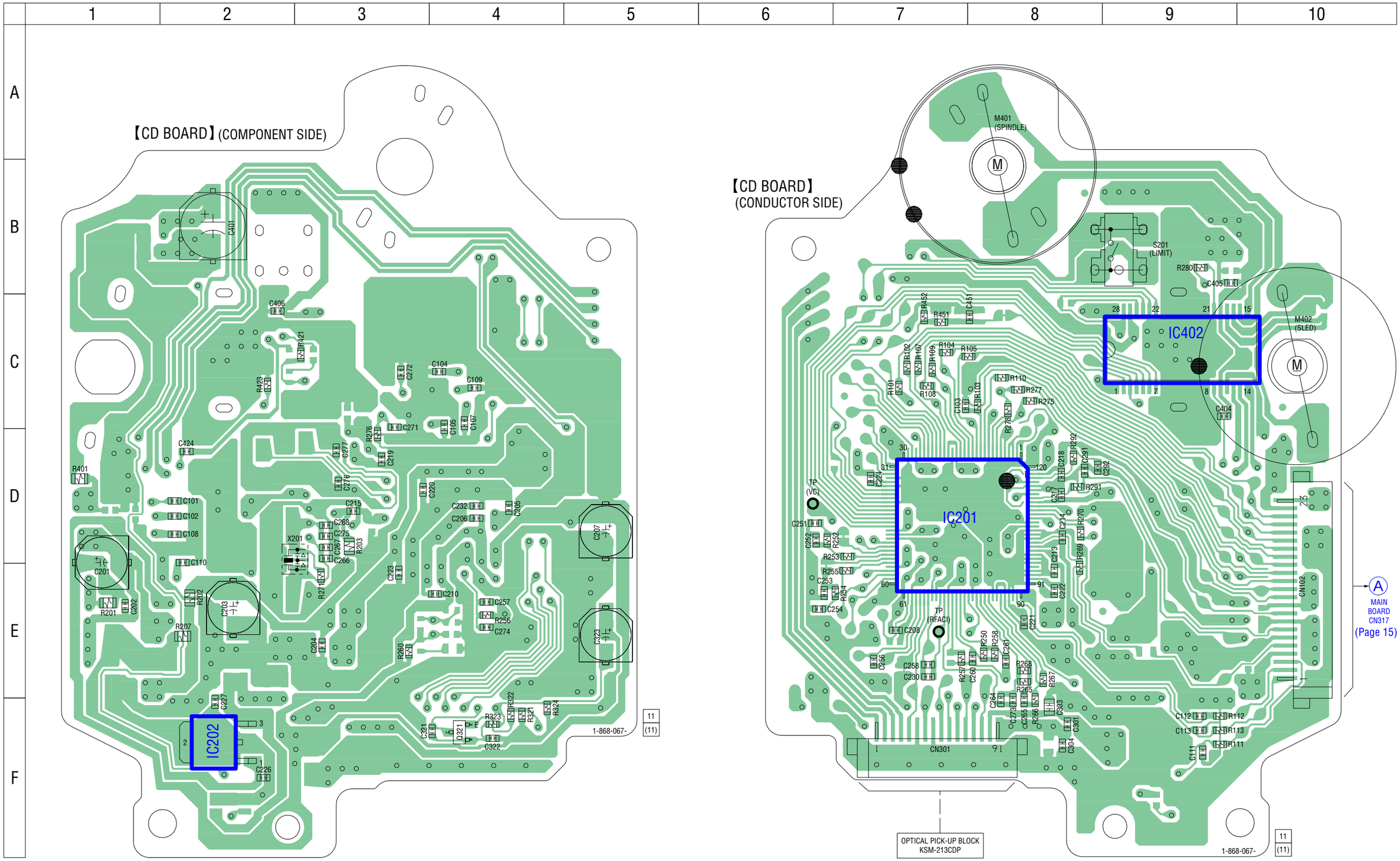

4-4. SCHEMATIC DIAGRAM – CD Board –

• See page 14 for Waveforms. • See page 23 for IC Block Diagrams. • See page 24 for IC Pin Function Description.

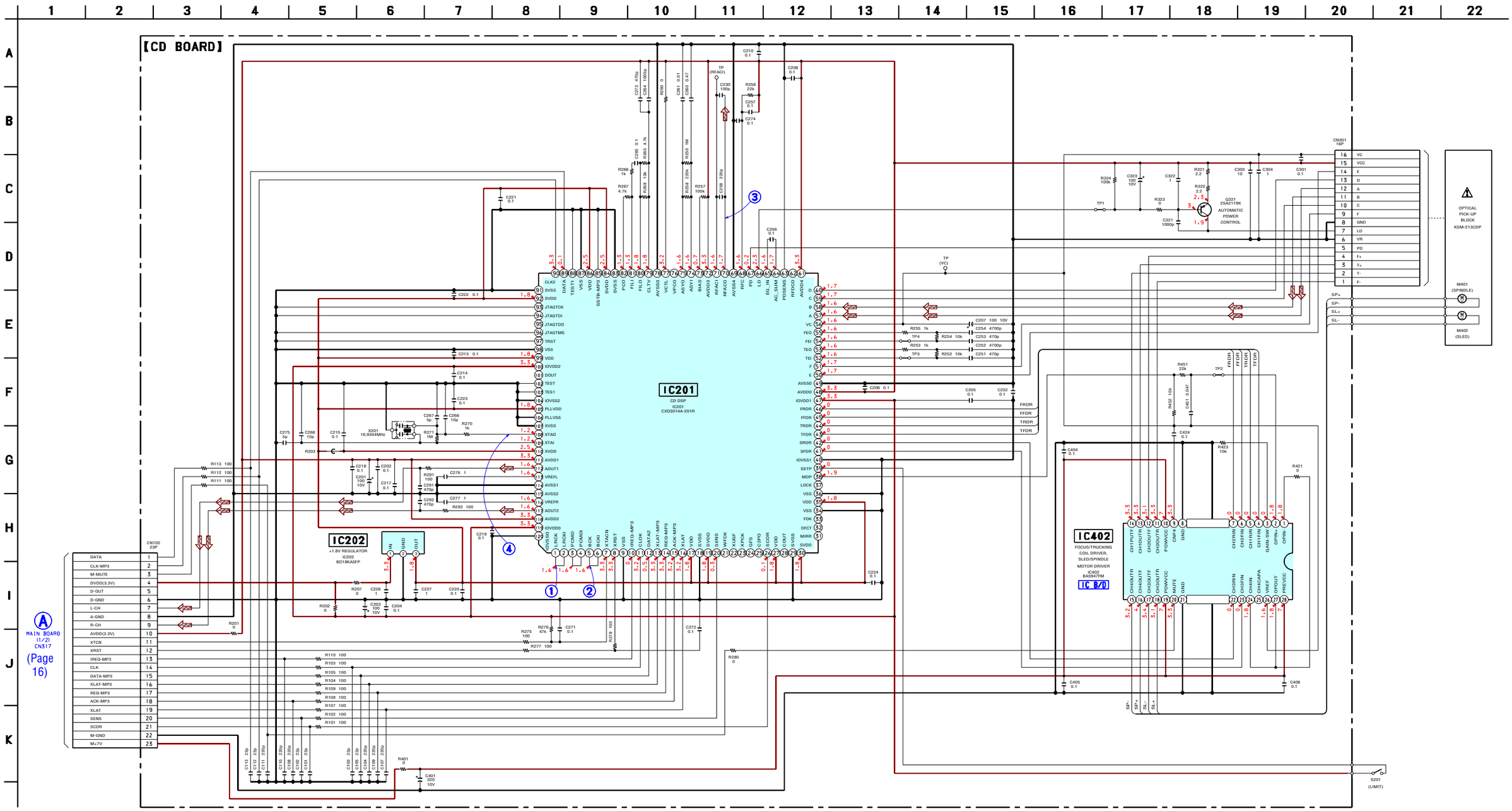

- **Waveforms**

– CD Board –

① IC201 ① (LRCK)
(CD PLAY mode)

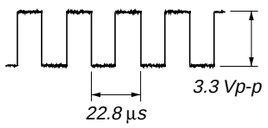

1 V/DIV, 10 µs/DIV

② IC201 ⑤ (BCK)
(CD PLAY mode)

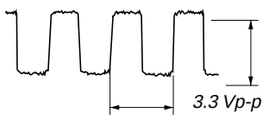

1 V/DIV, 200 ns/DIV

③ IC201 ⑦⓪ (RFACO)
(CD PLAY mode)

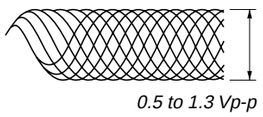

200 mV/DIV, 500 ns/DIV

④ IC201 ⑩⓪ (XTAO)
(CD PLAY mode)

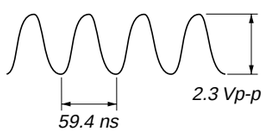

1 V/DIV, 20 ns/DIV

– MAIN Board –

⑪ T301 ④
(REC mode)

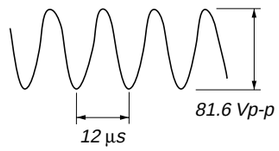

50 V/DIV, 5 µs/DIV

⑫ Q344 (Collector)
(REC mode)

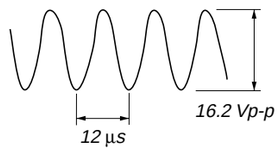

5 V/DIV, 5 µs/DIV

– PANEL Board –

㉑ IC801 ⑭ (X1A)

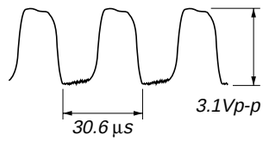

1 V/DIV, 10 µs/DIV

㉒ IC801 ⑨③ (XO)
(CD play mode)

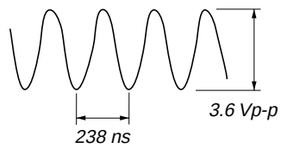

1 V/DIV, 100 ns/DIV

4-5. PRINTED WIRING BOARDS – MAIN Section –

• See page 11 for Circuit Boards Location. : Uses unleaded solder.

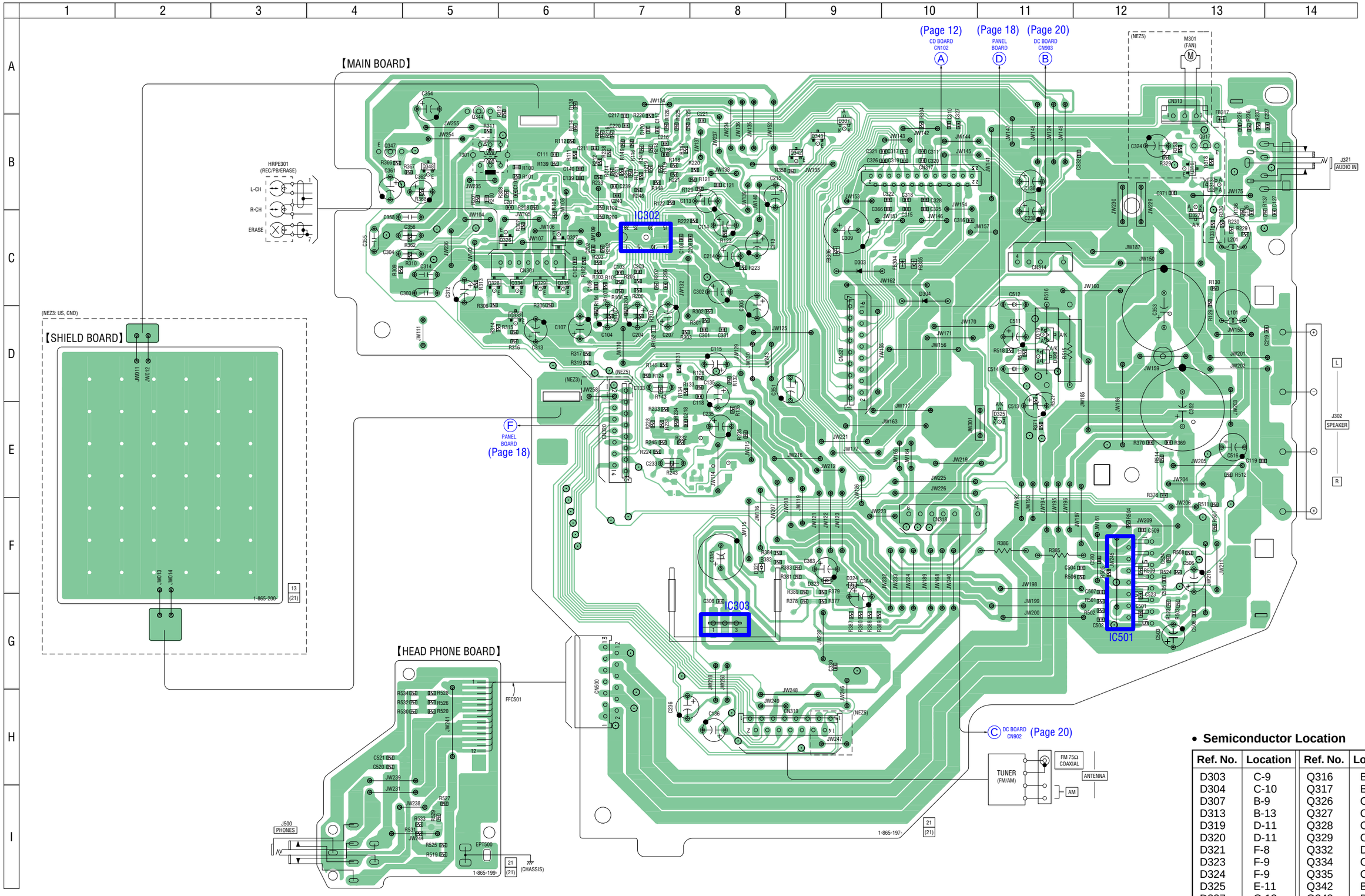

• **Semiconductor Location**

Ref. No.	Location	Ref. No.	Location
D303	C-9	Q316	B-13
D304	C-10	Q317	B-13
D307	B-9	Q326	C-6
D313	B-13	Q327	C-6
D319	D-11	Q328	C-5
D320	D-11	Q329	C-6
D321	F-8	Q332	D-6
D323	F-9	Q334	C-6
D324	F-9	Q335	C-6
D325	E-11	Q342	B-9
D327	C-13	Q343	B-9
		Q344	A-5
IC302	C-7	Q347	B-4
IC303	G-8	Q348	B-5
IC501	F-12		

4-6. SCHEMATIC DIAGRAM – MAIN Section (1/2) –

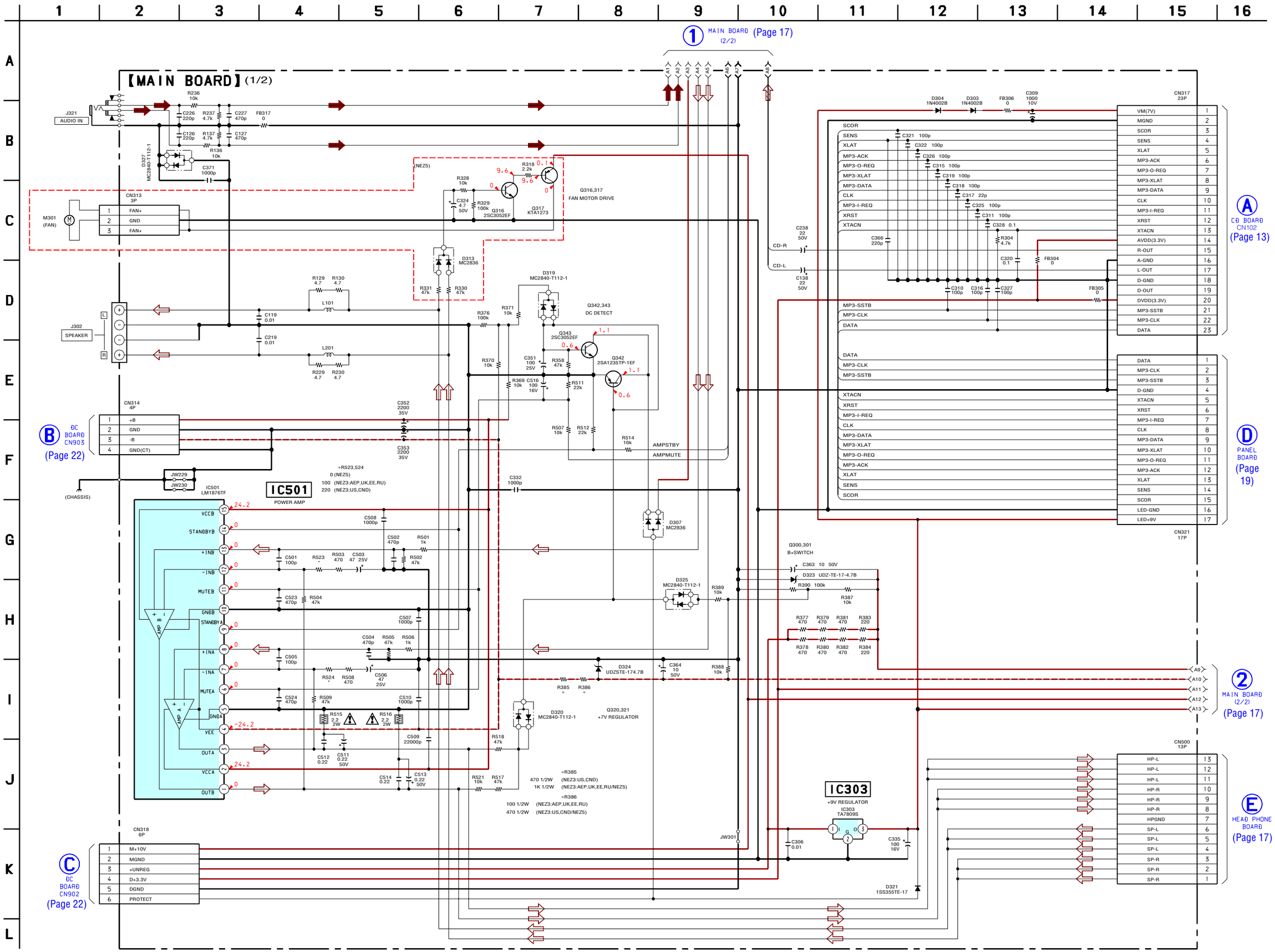

4-7. SCHEMATIC DIAGRAM – MAIN Section (2/2) –

• See page 23 for IC Block Diagrams.

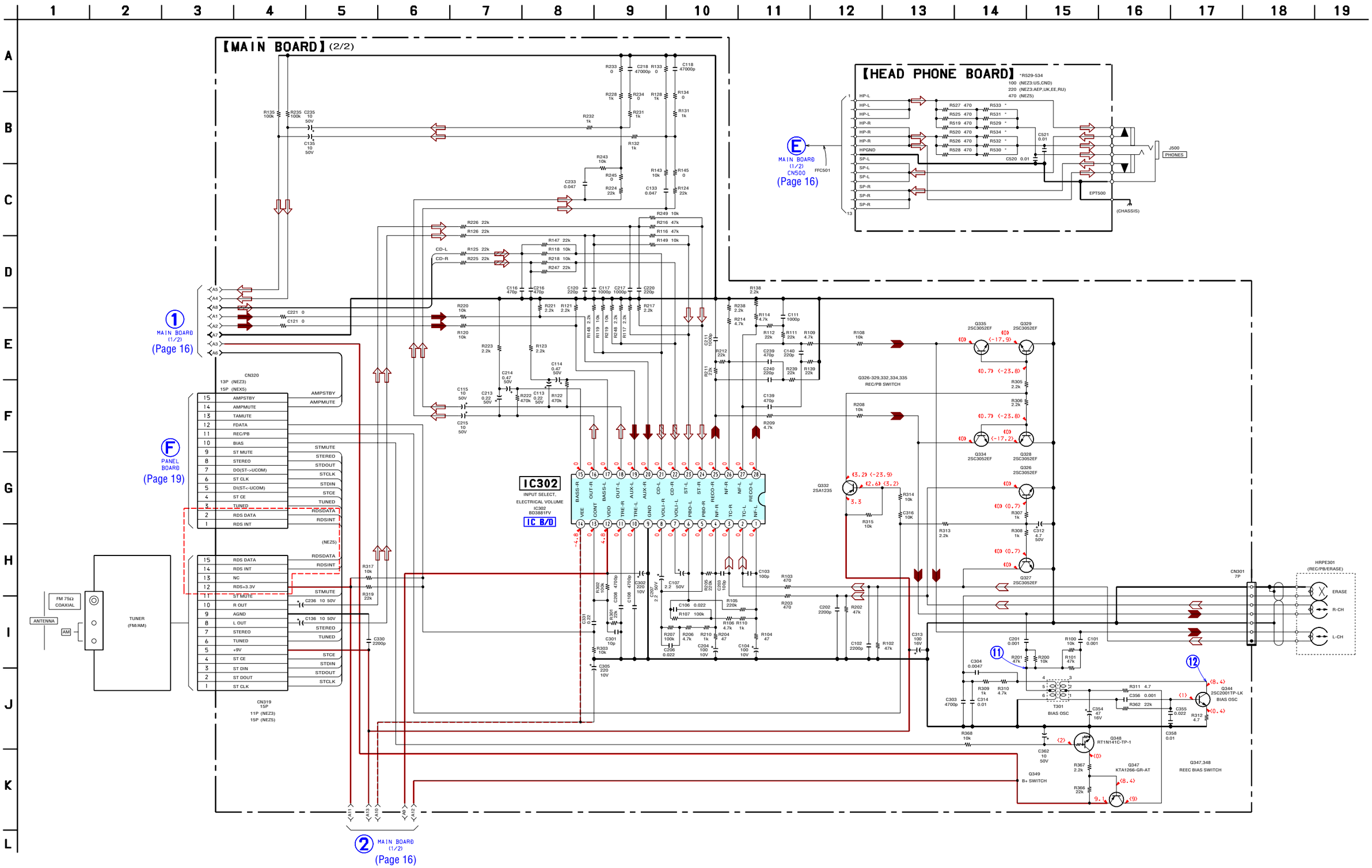

4-8. PRINTED WIRING BOARD – PANEL Board –

• See page 11 for Circuit Boards Location.

: Uses unleaded solder.

- **Semiconductor Location**

Ref. No.	Location
D801	G-7
D804	C-4
D805	C-4
D806	F-8
D807	C-9
D809	C-9
IC801	D-7
IC802	D-9
IC803	B-9
Q801	C-8
Q802	G-5
Q803	G-4
Q804	G-5
Q805	G-4
Q807	B-8
Q808	C-4

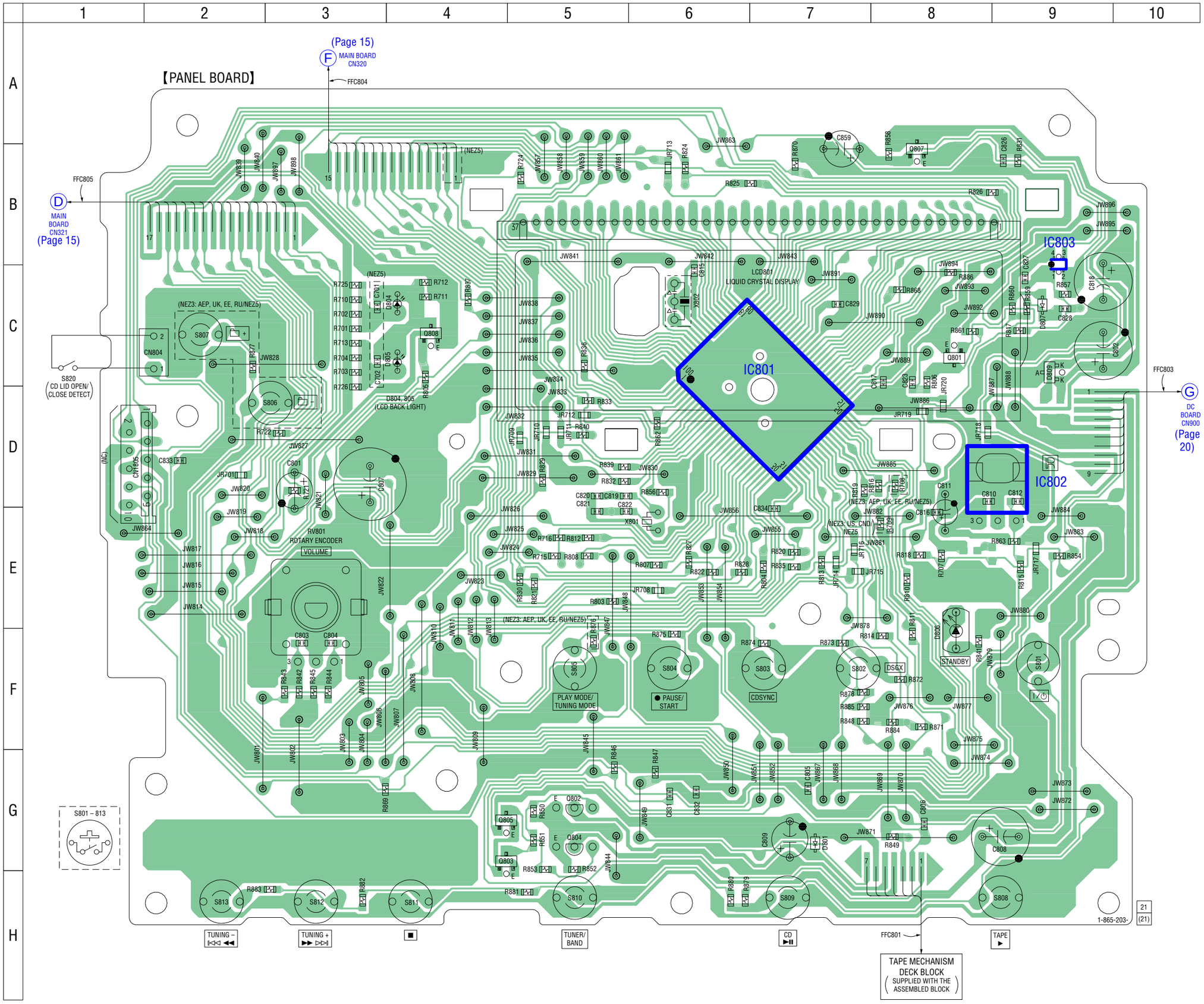

4-9. SCHEMATIC DIAGRAM – PANEL Board –

• See page 14 for Waveforms. • See page 24 for IC Pin Function Description.

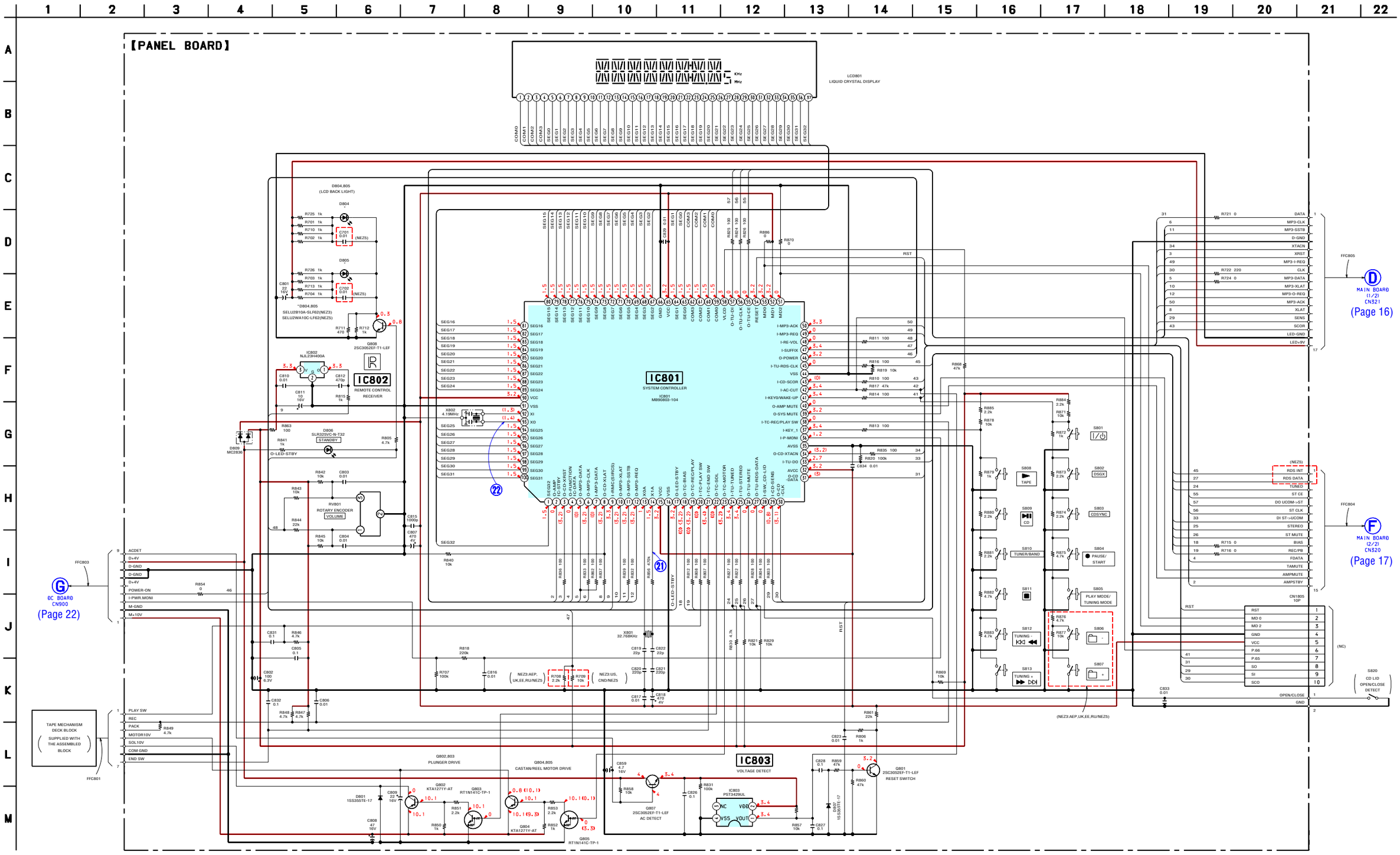

4-10. PRINTED WIRING BOARDS – DC Section –

• See page 11 for Circuit Boards Location. : Uses unleaded solder.

• **Semiconductor Location**

Ref. No.	Location
D322	H-4
D911	F-3
D912	F-3
D913	F-3
D914	F-3
D916	E-7
D917	D-7
D918	E-7
D919	F-7
D920	E-4
D926	F-6
D927	F-6
D928	F-6
D936	F-4
IC900	F-1
IC901	G-6
IC903	H-9
Q315	H-8
Q333	H-4
Q338	H-4

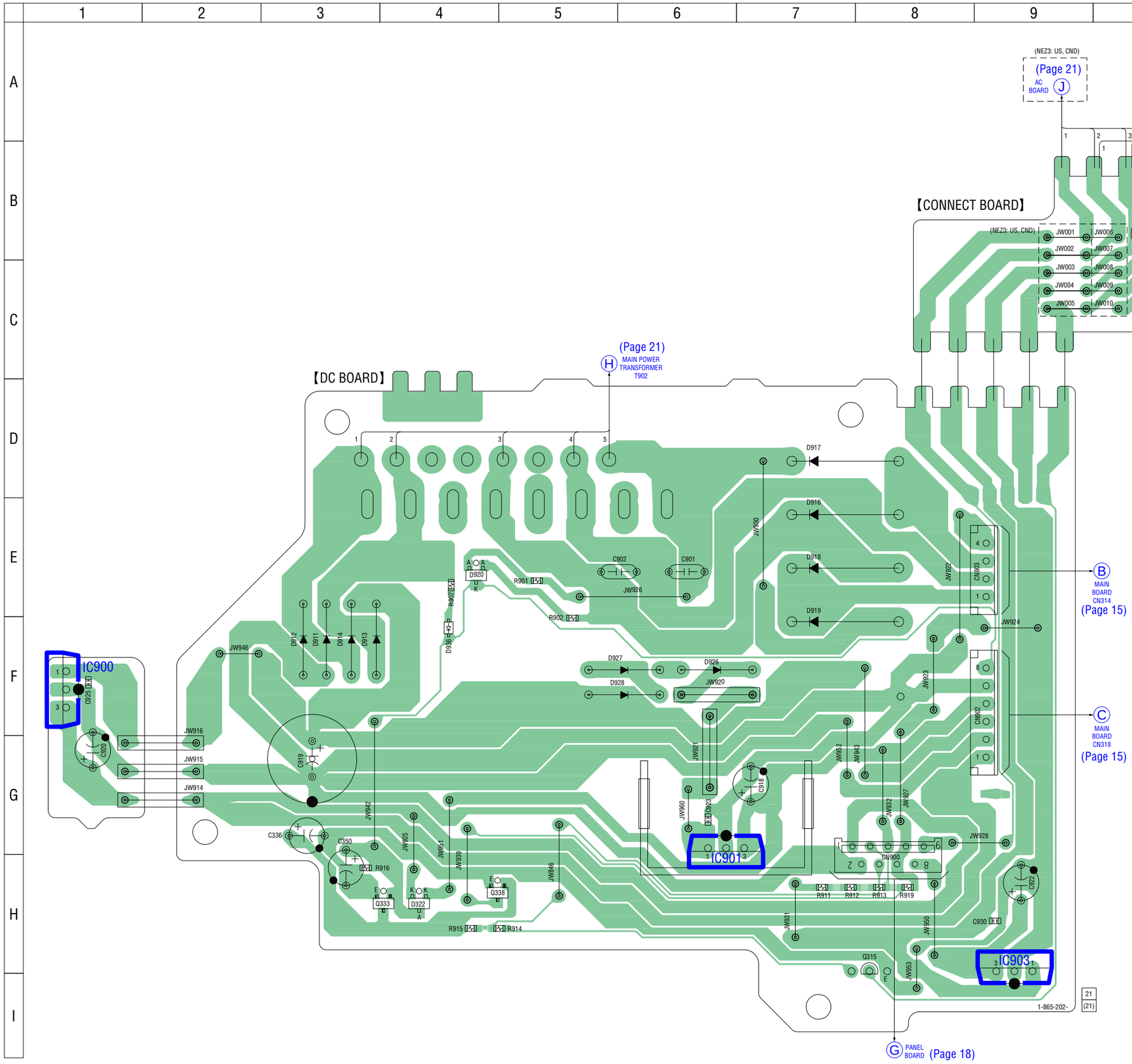

4-11. PRINTED WIRING BOARD – AC Board –

• See page 11 for Circuit Boards Location. : Uses unleaded solder.

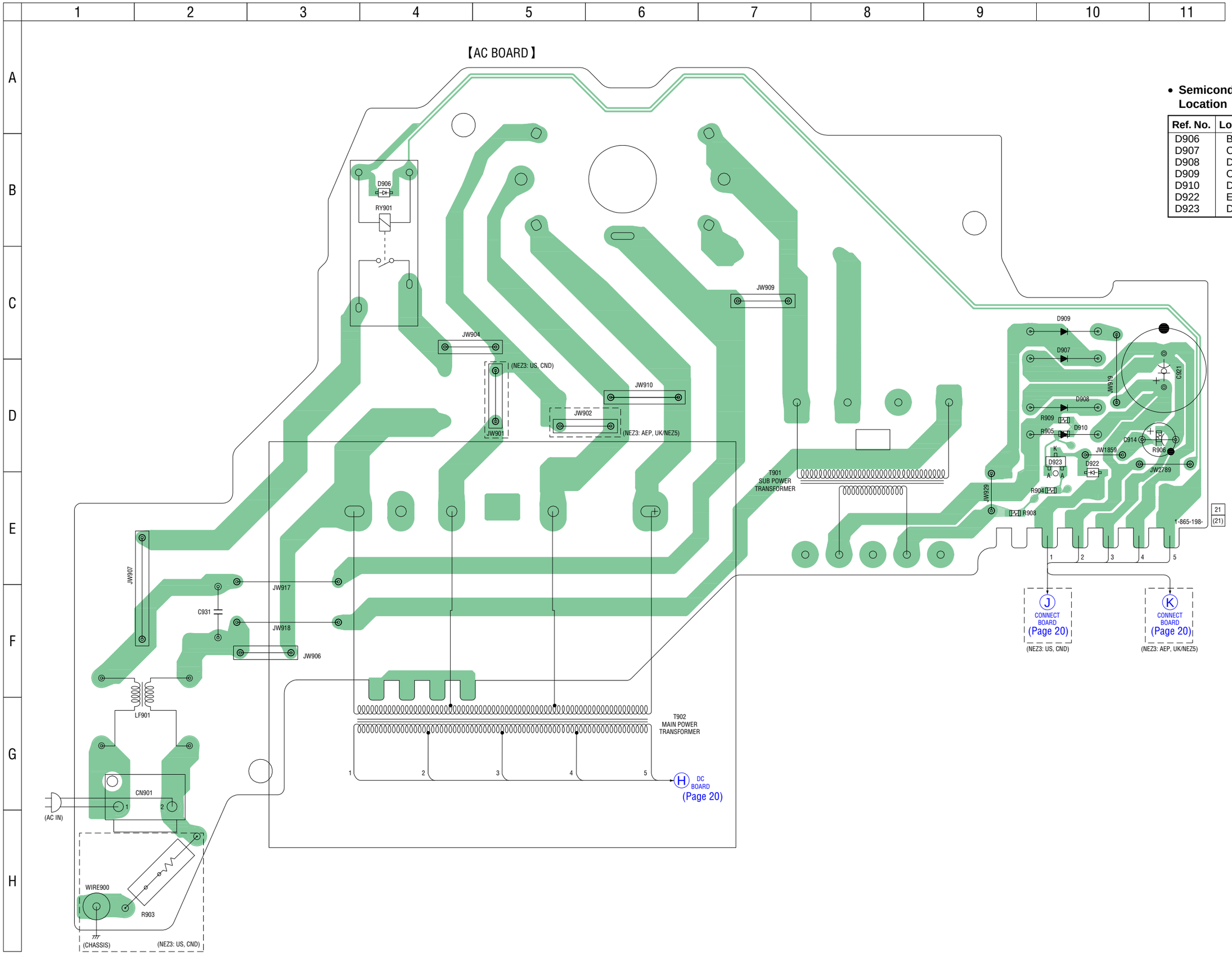

• **Semiconductor Location**

Ref. No.	Location
D906	B-4
D907	C-10
D908	D-10
D909	C-10
D910	D-10
D922	E-10
D923	D-10

4-12. SCHEMATIC DIAGRAM – POWER SUPPLY Section –

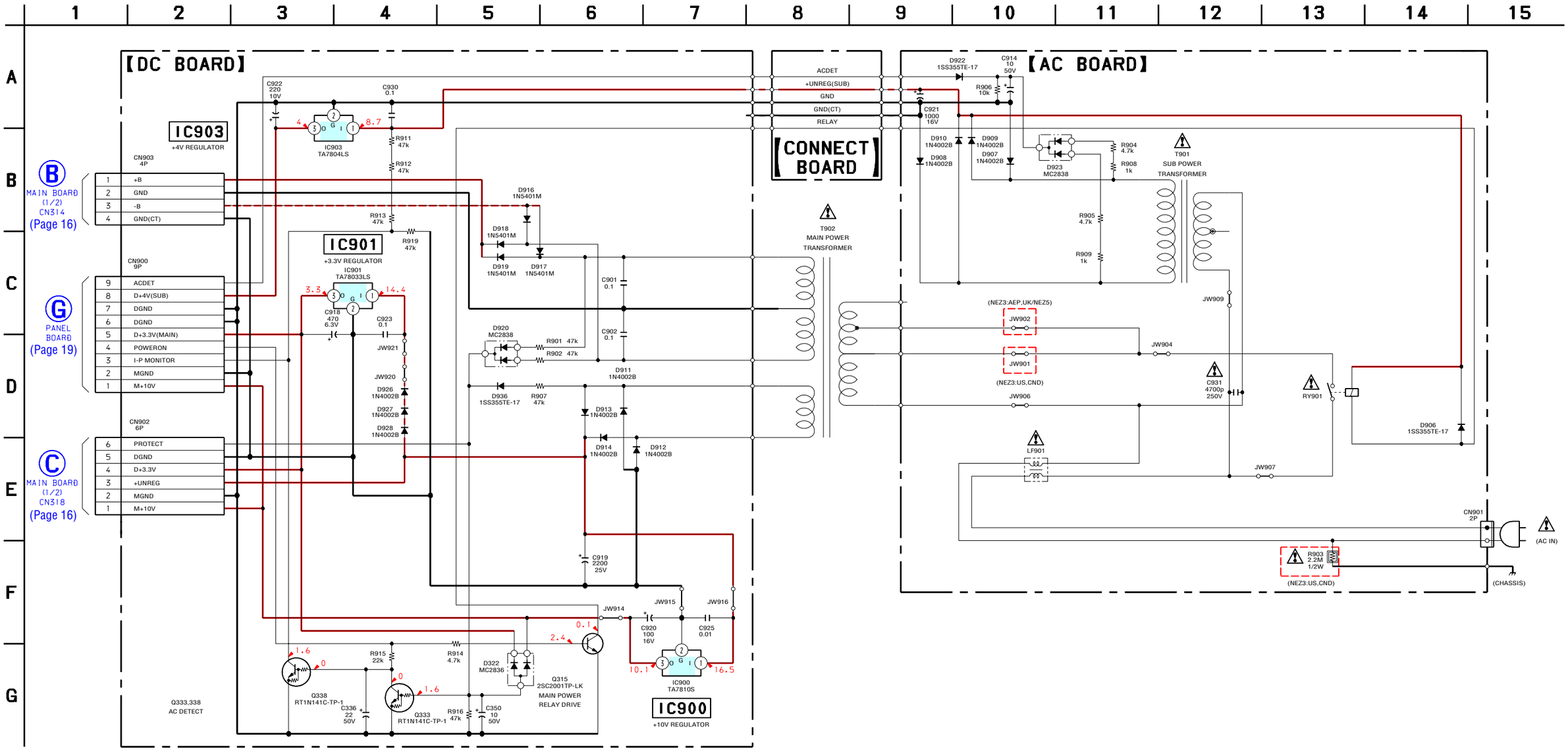

- **IC Block Diagrams**

– CD Board –

IC402 BA5947FM-E2

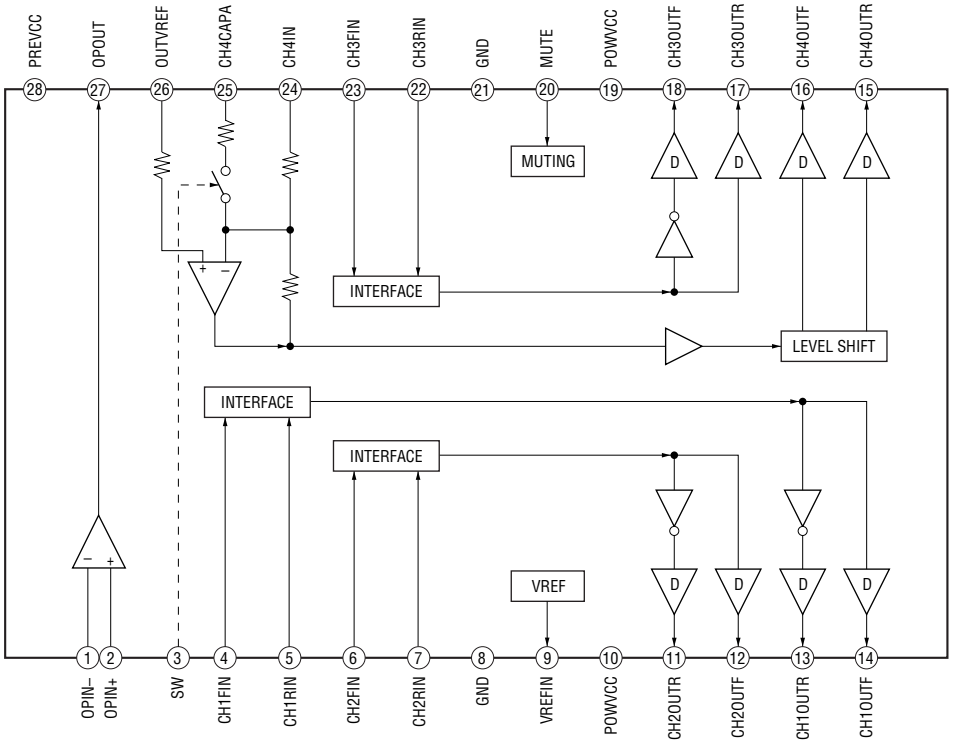

– MAIN Board –

IC301 BD3881FV

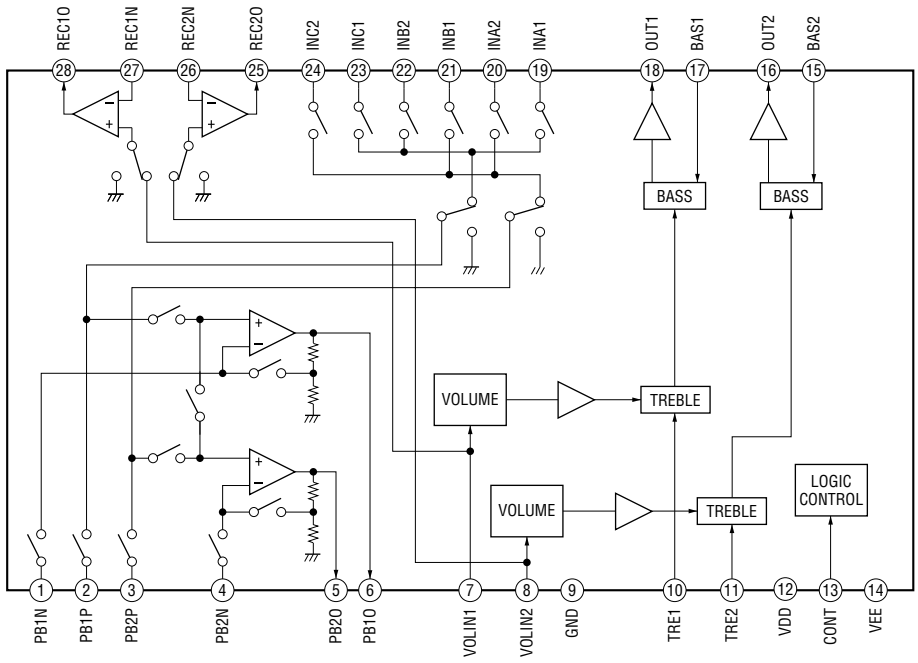

- **IC PIN FUNCTION DESCRIPITION**

CD BOARD IC201 CXD3014A-201R (CD DSP)

Pin No.	Pin Name	I/O	Description
1	LRCK	O	L/R sampling clock signal output terminal
2	LRCKI	I	L/R sampling clock signal input terminal
3	PCMD	O	Serial data output terminal
4	PCMDI	I	Serial data input terminal
5	BCK	O	Bit clock signal output terminal
6	BCKI	I	Bit clock signal input terminal
7	XTACN	I	Oscillation circuit on/off switch control signal input from the system controller "L": oscillation stop, "H": self-oscillation
8	XRST	I	System reset signal input from the system controller "L": reset
9	VSS	-	Ground terminal
10	IREQ-MP3	O	MP3 data request signal output to the system controller
11	CLOK	I	CD serial data transfer clock signal input from the system controller
12	DATA2	I	MP3 serial data input from the system controller
13	XLAT-MP3	I	MP3 serial data latch pulse signal input from the system controller
14	REQ-MP3	I	MP3 data request signal input from the system controller
15	ACK-MP3	O	MP3 acknowledge signal output to the system controller
16	XLAT	I	CD serial data latch pulse signal input from the system controller
17	VDD	-	Power supply terminal (+1.8V)
18	SVSS	-	Ground terminal
19	SVDD	-	Power supply terminal (+1.8V)
20	SENS	O	Internal status (SENSE) signal output to the system controller
21	WFCK	-	Not used
22	XUGF	-	Not used
23	XPCK	-	Not used
24	GFS	-	Not used
25	C2PO	-	Not used
26	SCOR	O	Subcode sync (S0+S1) detection signal output to the system controller
27	VDD	-	Power supply terminal (+1.8V)
28	COUT	-	Not used
29	SVSS	-	Ground terminal
30	SVDD	-	Power supply terminal (+1.8V)
31	MIRR	-	Not used
32	DFCT	-	Not used
33	FOK	-	Not used
34	VSS	-	Ground terminal
35	VDD	-	Power supply terminal (+1.8V)
36	VSS	-	Ground terminal
37	MIRR	-	Not used
38	MDP	O	Spindle motor servo control signal output terminal
39	SSTP	I	Disc inner position detection signal input terminal
40	IOVSS1	-	Ground terminal
41	SFDR	O	Sled servo drive signal (+) output to the coil/motor driver
42	SRDR	O	Sled servo drive signal (-) output to the coil/motor driver
43	TFDR	O	Tracking servo drive signal (+) output to the coil/motor driver
44	TRDR	O	Tracking servo drive signal (-) output to the coil/motor driver
45	FFDR	O	Focus servo drive signal (+) output to the coil/motor driver
46	FRDR	O	Focus servo drive signal (-) output to the coil/motor driver
47	IOVDD1	-	Power supply terminal (+3.3V)

Pin No.	Pin Name	I/O	Description
48	AVDD0	-	Power supply terminal (+3.3V)
49	AVSS0	-	Ground terminal
50	E	I	E signal input from the optical pick-up block
51	F	I	F signal input from the optical pick-up block
52	TEI	I	Tracking error signal input terminal
53	TEO	O	Tracking error signal output terminal
54	FEI	I	Focus error signal input terminal
55	FEO	O	Focus error signal output terminal
56	VC	O	Middle point voltage output terminal
57	A	I	A signal input from the optical pick-up block
58	B	I	B signal input from the optical pick-up block
59	C	I	C signal input from the optical pick-up block
60	D	I	D signal input from the optical pick-up block
61	AVDD4	-	Power supply terminal (+3.3V)
62	RFDCO	O	Not used
63	PDSENS	I	Not used
64	AC_SUM	O	RFAC summing amplifier signal output terminal
65	EQ_IN	I	RF equalizer circuit input terminal
66	LD	O	Laser diode on/off control signal output to the automatic power control circuit "L": laser off, "H": laser on
67	PD	I	Light amount monitor input from the optical pick-up block laser diode
68	RFC	I	Equalizer cut off frequency adjustment terminal
69	AVSS4	-	Ground terminal
70	RFACO	O	EFM signal output terminal
71	RFACI	I	EFM signal input terminal
72	AVDD3	-	Power supply terminal (+3.3V)
73	BIAS	I	Asymmetry circuit constant current input terminal
74	ASYI	I	Playback EFM asymmetry comparator voltage input terminal
75	ASYO	O	Playback EFM full-swing output terminal
76	VPCO	O	Charge pump output terminal for broad-band EFM PLL
77	VCTL	I	VCO2 control voltage input terminal for broad-band EFM PLL
78	AVSS3	-	Ground terminal
79	CLTV	I	VCO1 control voltage input terminal for multiplier
80	FILO	O	Filter output terminal for master PLL
81	FILI	I	Filter input terminal for master PLL
82	PCO	O	Charge pump output terminal for master PLL
83	SVSS	-	Ground terminal
84	SVDD	-	Power supply terminal (+1.8V)
85	SSTB-MP3	I	MP3 standby on/off control signal input terminal "L": standby Not used
86	VDD	-	Power supply terminal (+1.8V)
87	VSS	-	Ground terminal
88	TEST1	I	Test terminal Normally: fixed at "L"
89	DATA	I	CD serial data input from the system controller
90	CLK2	I	MP3 serial data transfer clock signal input from the system controller
91	SVSS	-	Ground terminal
92	SVDD	-	Power supply terminal (+2.5V)
93	JTAGTCK	-	Not used
94	JTAGTDI	-	Not used
95	JTAGTDO	-	Not used
96	JTAGTMS	-	Not used

Pin No.	Pin Name	I/O	Description
97	TRST	-	Not used
98	VSS	-	Ground terminal
99	VDD	-	Power supply terminal (+1.8V)
100	IOVDD2	-	Power supply terminal (+3.3V)
101	DOUT	O	Digital audio signal output terminal Not used
102	TEST	I	Test terminal Normally: fixed at "L"
103	TES1	I	Test terminal Normally: fixed at "L"
104	IOVSS2	-	Ground terminal
105	PLLVDD	-	Power supply terminal (+1.8V)
106	PLLVSS	-	Ground terminal
107	XVSS	-	Ground terminal
108	XTAO	O	System clock output terminal (16.9344 MHz)
109	XTAI	I	System clock input terminal (16.9344 MHz)
110	XVDD	-	Power supply terminal (+1.8V)
111	AVDD1	-	Power supply terminal (+3.3V)
112	AOUT1	O	L-ch analog audio signal output terminal
113	VREFL	O	L-ch reference voltage output terminal
114	AVSS1	-	Ground terminal
115	AVSS2	-	Ground terminal
116	VREFR	O	R-ch reference voltage output terminal
117	AOUT2	O	R-ch analog audio signal output terminal
118	AVDD1	-	Power supply terminal (+3.3V)
119	IOVDD0	-	Power supply terminal (+3.3V)
120	IOVSS0	-	Ground terminal

PANEL BOARD IC801 MB90803-104 (SYSTEM CONTROLLER)

Pin No.	Pin Name	I/O	Description
1	SEG32	O	Segment drive signal output to the liquid crystal display
2	O-AMPICSTBY	O	Standby control signal output to the power amplifier
3	O-CD-XRST	O	System reset signal output to the CD DSP
4	O-FUNCTION IC-DATA	O	Serial data output to the electrical volume
5	O-MP3-DATA	O	MP3 serial data output to the CD DSP
6	O-MP3-CLK	O	MP3 serial data transfer clock signal output to the CD DSP
7	I-MP3-DATA	I	MP3 serial data input terminal
8	O-CD-XLAT	O	CD serial data latch pulse signa output to the CD DSP
9	I-RMC (SIRCS)	I	Remote control signal input from the remote control receiver
10	O-XLAT-MP3	O	MP3 serial data latch pulse signal output to the CD DSP
11	O-MP3-SSTB	O	System reset signal output to the motor/coil driver
12	O-REQ-MP3	O	MP3 data request signal output to the CD DSP
13	X0A	I	Sub system clock input terminal (32.768 kHz)
14	X1A	O	Sub system clock output terminal (32.768 kHz)
15	VCC	-	Power supply terminal (+3.2V)
16	VSS	-	Ground terminal
17	O-LED-STBY	O	LED drive signal output terminal for STANDBY indicater
18	O-TC-BIAS	O	Recording bias on/off selection signal output terminal "H": bias on, "L": bias off
19	O-TC-REC/PB	O	Recording/playback selection signal output terminal "H": playback mode, "L": recording mode
20	I-TC-PLAY SW	I	PLAY switch signal input from the tape mechanism deck
21	I-TC-END SW	I	END switch signal input from the tape mechanism deck
22	O-TC-SOL	O	Trigger plunger on/off control signal output terminal "H": plunger on
23	O-TC-MOTOR	O	Capstan/reel motor on/off control signal output terminal "H": motor on
24	I-TU-TUNED	I	Tuning detection signal input from the tuner (FM/AM)
25	I-TU-STEREO	I	FM stereo detection signal input from the tuner (FM/AM)
26	O-TU-MUTE	O	Tuner muting on/off control signal output to the tuner (FM/AM)
27	I-TU-RDS-DATA	I	RDS serial data input from the tuner (FM/AM) (NEZ5 only)
28	I-SW_CD-LID	I	CD lid open/close detection switch input terminal "L": CD lid close
29	I-CD-SENS	I	Internal status (SENSE) signal input from the CD DSP
30	O-CD-CLK	O	CD serial data transfer clock signal output to the CD DSP
31	O-CD-DATA	O	CD serial data output to the CD DSP
32	AVCC	-	Power supply terminal (+3.2V)
33	I-TU-DO	I	Serial data input from the tuner (FM/AM)
34	O-CD-XTACN	O	Oscillator control signal output to the CD DSP
35	AVSS	-	Ground terminal
36	I-P-MONI	I	Power monitor input terminal
37	I-KEY_1	I	Front panel key input terminal (A/D input)
38	I-TC-REC/PLAY	I	Recording-proof claw (forward/reverse) detect switch and cassette in detect switch input terminal
39	O-SYS MUTE	O	Line muting on/off control signal output terminal Not used
40	O-AMP MUTE	O	Tuner muting on/off control signal output to the power amplifier
41	I-KEY0/WAKE-UP	I	Key interruption processing start signal and front panel key input terminal (A/D input)
42	ACCUT	I	Power down detection signal input terminal "L": power down, normally : "H"
43	I-CD-SCOR	I	Subcode sync (S0+S1) detection signal input from the CD DSP
44	VSS	-	Ground terminal
45	I-TU-RDS-CLK	I	RDS serial data transfer clock signal input from the tuner (FM/AM) (NEZ5 only)

Pin No.	Pin Name	I/O	Description
46	O-POWER	O	Power relay drive signal output terminal "H": on
47	I-SUFFIX	I	Model destination setting terminal
48	I-RE-VOL	I	Dial pulse input of the rotary encoder (for VOLUME control)
49	I-MP3-REQ	I	MP3 data request signal input from the CD DSP
50	I-MP3-ACK	I	MP3 acknowledge signal input from the CD DSP
51 to 53	MD2 to MD0	-	Not used
54	RESET	I	Reset signal input from the reset switch "L": reset For several hundreds msec. after the power supply rises, "L" is input, then it changes to "H"
55	O-TU-CE	O	Chip enable signal output to the tuner (FM/AM)
56	O-TU-CLK	O	serial data transfer clock signal output to the tuner (FM/AM)
57	O-TU-DI	O	Serial data output to the tuner (FM/AM)
58	VLCD	-	Terminal for doubler circuit capacitor connection to develop liquid crystal display drive voltage
59 to 62	COM0 to COM3	O	Common drive signal output to the liquid crystal display
63, 64	SEG0, SEG1	O	Segment drive signal output to the liquid crystal display
65	VCC	-	Power supply terminal (+3.2V)
66	GND	-	Ground terminal
67 to 89	SEG2 to SEG24	O	Segment drive signal output to the liquid crystal display
90	VCC	-	Power supply terminal (+3.2V)
91	VSS	-	Ground terminal
92	XI	I	Main system clock input terminal (4.19 MHz)
93	XO	O	Main system clock output terminal (4.19 MHz)
94 to 100	SEG25 to SEG31	O	Segment drive signal output to the liquid crystal display

5. EXPLODED VIEW

NOTE:

- -XX and -X mean standardized parts, so they may have some difference from the original one.
- Color Indication of Appearance Parts
  Example:
  KNOB, BALANCE (WHITE) . . . (RED)
  ↑ Parts Color ↑ Cabinet's Color
- Abbreviation
  CND : Canadian model
  EE : East European model
  RU : Russian model
- Items marked "*" are not stocked since they are seldom required for routine service. Some delay should be anticipated when ordering these items.
- The mechanical parts with no reference number in the exploded views are not supplied.
- Accessories are given in the last of the electrical parts list.

The components identified by mark ⚠ or dotted line with mark ⚠ are critical for safety.
Replace only with part number specified.

Les composants identifiés par une marque ⚠ sont critiquens pour la sécurité.
Ne les remplacer que par une pièce portant le numéro spécifié.

5-1. CABINET SECTION

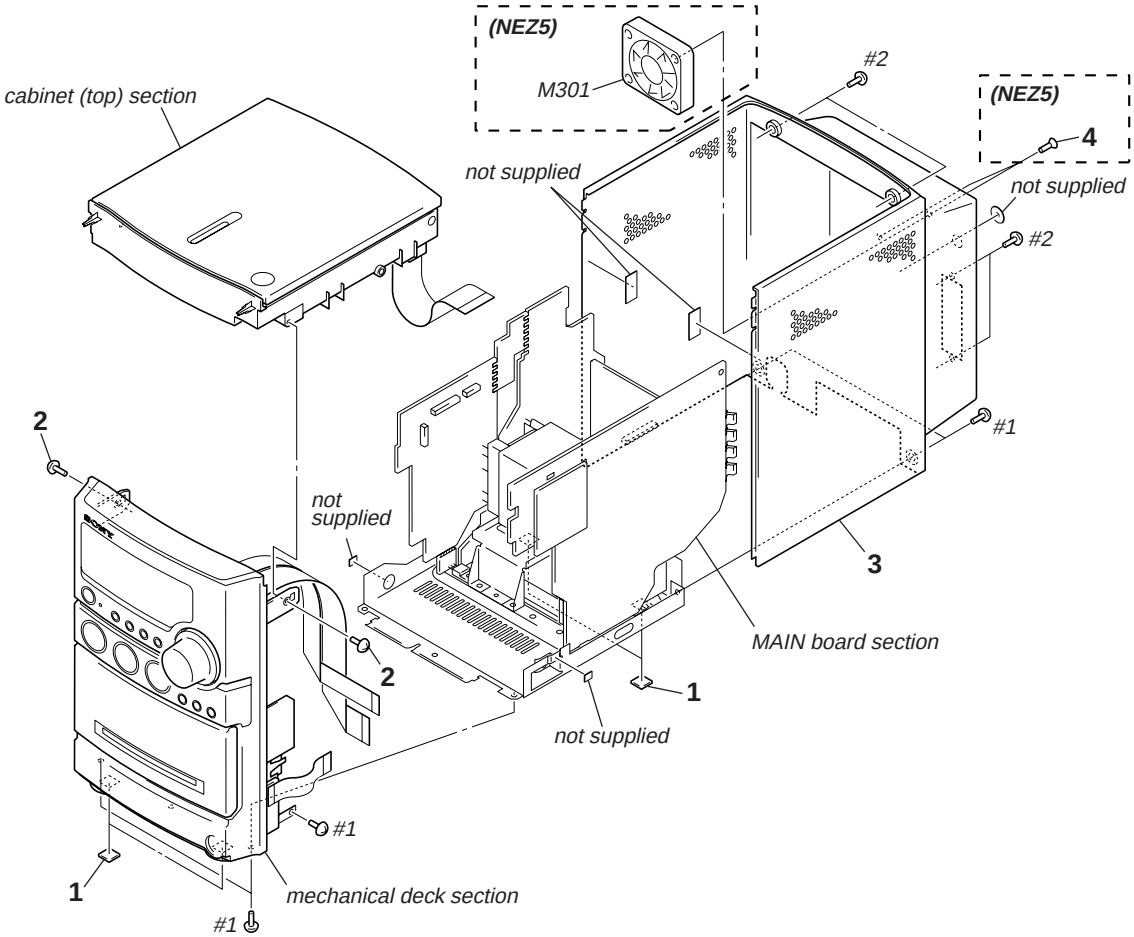

Ref. No.	Part No.	Description	Remark
1	4-247-752-01	FOOT, RUBBER	
2	4-951-620-01	SCREW (2.6X8), +BVTP	
3	2-581-397-02	CABINET (NEZ3: US)	
3	2-581-399-03	CABINET (NEZ3: AEP, UK, EE, RU)	
3	2-581-399-12	CABINET (NEZ3: CND)	
4	4-671-016-01	SCREW (FAN) (NEZ5)	
M301	1-787-103-11	FAN, DC (NEZ5)	
#1	7-685-646-79	SCREW +BVTP 3X8 TYPE2 N-S	
#2	7-685-647-79	SCREW +BVTP 3X10 TYPE2 N-S	

5-2. MECHANICAL DECK SECTION

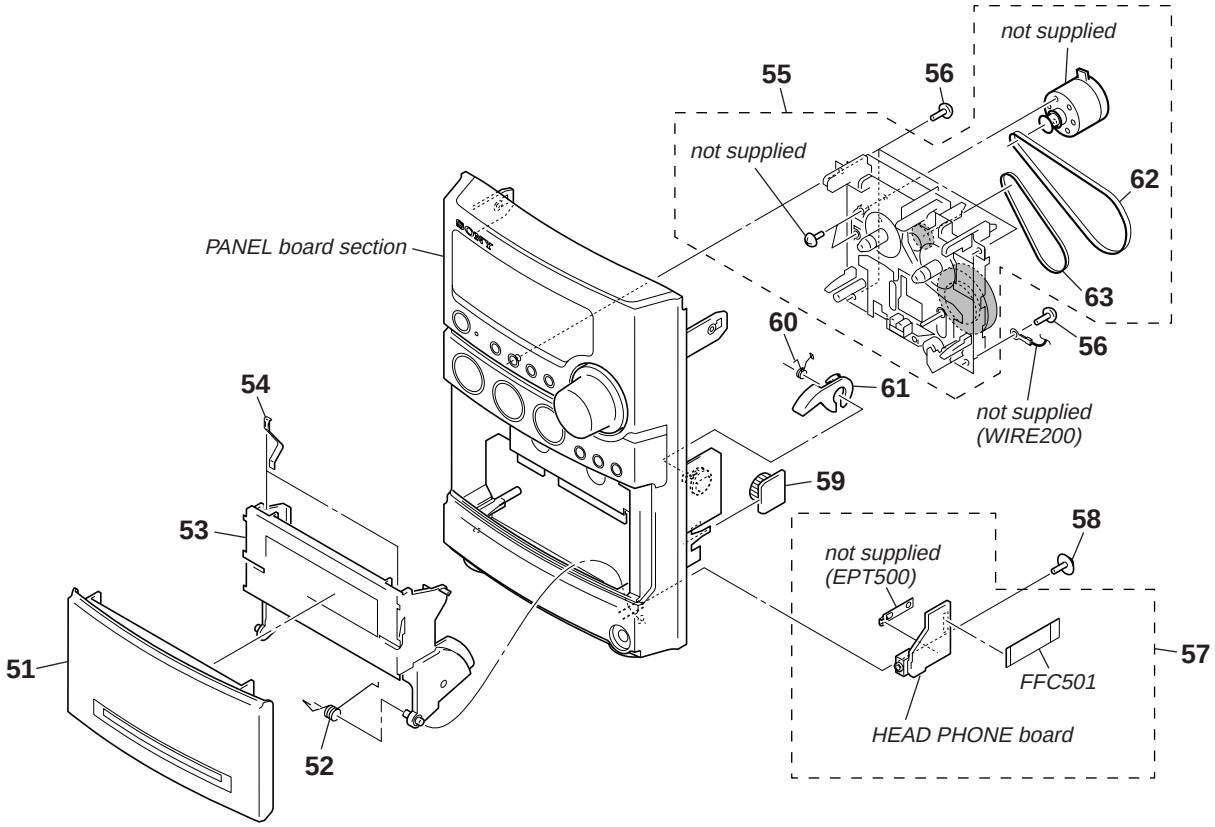

Ref. No.	Part No.	Description	Remark
51	X-2048-718-1	LID ASSY, CASSETTE	
52	4-245-034-01	SPRING (CASSETTE)	
53	2-581-395-01	HOLDER (CASSETTE)	
54	4-238-631-01	TAPE SPRING	
55	1-796-352-71	DECK, MECHANICAL (CMAL5Z231)	
56	4-951-620-01	SCREW (2.6X8), +BVTP	
57	A-1139-347-A	HEAD PHONE BOARD, COMPLETE	(NEZ3: US, CND)
57	A-1139-427-A	HEAD PHONE BOARD, COMPLETE (NEZ5)	
57	A-1142-959-A	HEAD PHONE BOARD, COMPLETE	(NEZ3: AEP, UK, EE, RU)
58	4-933-134-11	SCREW (+PTPWH M2.6X8)	
59	4-224-104-41	DAMPER	
60	4-231-841-01	SPRING (HEART CAM-B)	
61	4-231-825-01	CAM (B), HEART	
62	2-655-725-01	BELT (MAIN)	
63	2-655-726-01	BELT (MO), F/R	
FFC501	1-830-584-12	CABLE, FLEXIBLE FLAT (13 CORE)	

5-3. PANEL BOARD SECTION

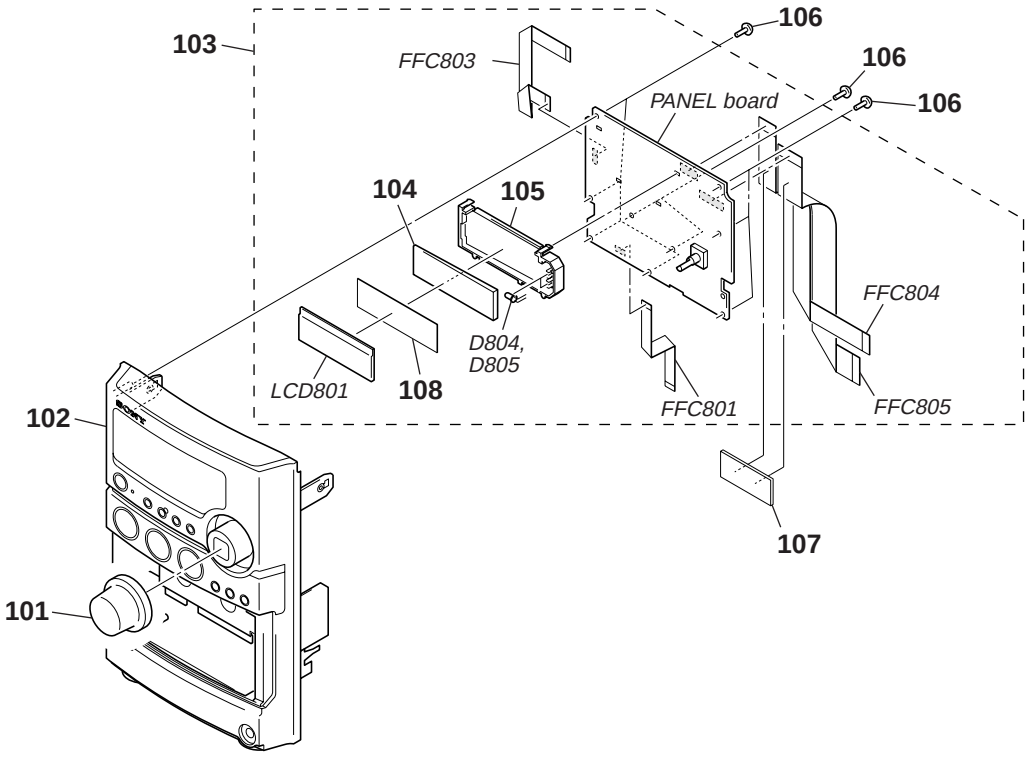

Ref. No.	Part No.	Description	Remark
101	2-581-385-02	KNOB (VOL) (NEZ3)	
101	2-581-385-11	KNOB (VOL) (NEZ5)	
102	X-2048-717-1	PANEL ASSY, FRONT (NEZ3: US)	
102	X-2048-755-1	PANEL ASSY, FRONT (NEZ3: AEP, UK, EE, RU)	
102	X-2050-120-1	PANEL ASSY, FRONT (NEZ5)	
102	X-2050-273-1	PANEL ASSY, FRONT (NEZ3: CND)	
103	A-1139-353-A	PANEL BOARD, COMPLETE (NEZ3: US, CND)	
103	A-1139-425-A	PANEL BOARD, COMPLETE (NEZ5)	
103	A-1142-952-A	PANEL BOARD, COMPLETE	(NEZ3: AEP, UK, EE, RU)
104	2-581-391-01	PLATE, LIGHT GUIDE	
105	2-581-390-01	HOLDER (LCD)	
106	4-951-620-01	SCREW (2.6X8), +BVTP	
107	2-591-582-01	PLATE (FRONT FFC), PROTECTION	
108	2-586-988-12	SHEET (LCD), DIFFUSION	

Ref. No.	Part No.	Description	Remark
D804	6-501-138-01	DIODE SELU2WA10C-LF62 (LCD BACK LIGHT)	(NEZ5)
D804	6-501-139-01	DIODE SELU2B10A-SLF62 (LCD BACK LIGHT)	(NEZ3)
D805	6-501-138-01	DIODE SELU2WA10C-LF62 (LCD BACK LIGHT)	(NEZ5)
D805	6-501-139-01	DIODE SELU2B10A-SLF62 (LCD BACK LIGHT)	(NEZ3)
FFC801	1-830-583-11	CABLE, FLEXIBLE FLAT (7 CORE)	
FFC803	1-830-579-11	CABLE, FLEXIBLE FLAT (9 CORE)	
FFC804	1-831-520-11	CABLE, FLEXIBLE FLAT (13 CORE) (NEZ3)	
FFC804	1-831-521-11	CABLE, FLEXIBLE FLAT (15 CORE) (NEZ5)	
FFC805	1-830-901-11	CABLE, FLEXIBLE FLAT (17 CORE)	
LCD801	1-805-783-11	DISPLAY PANEL, LIQUID CRYSTAL	

5-4. CABINET (TOP) SECTION

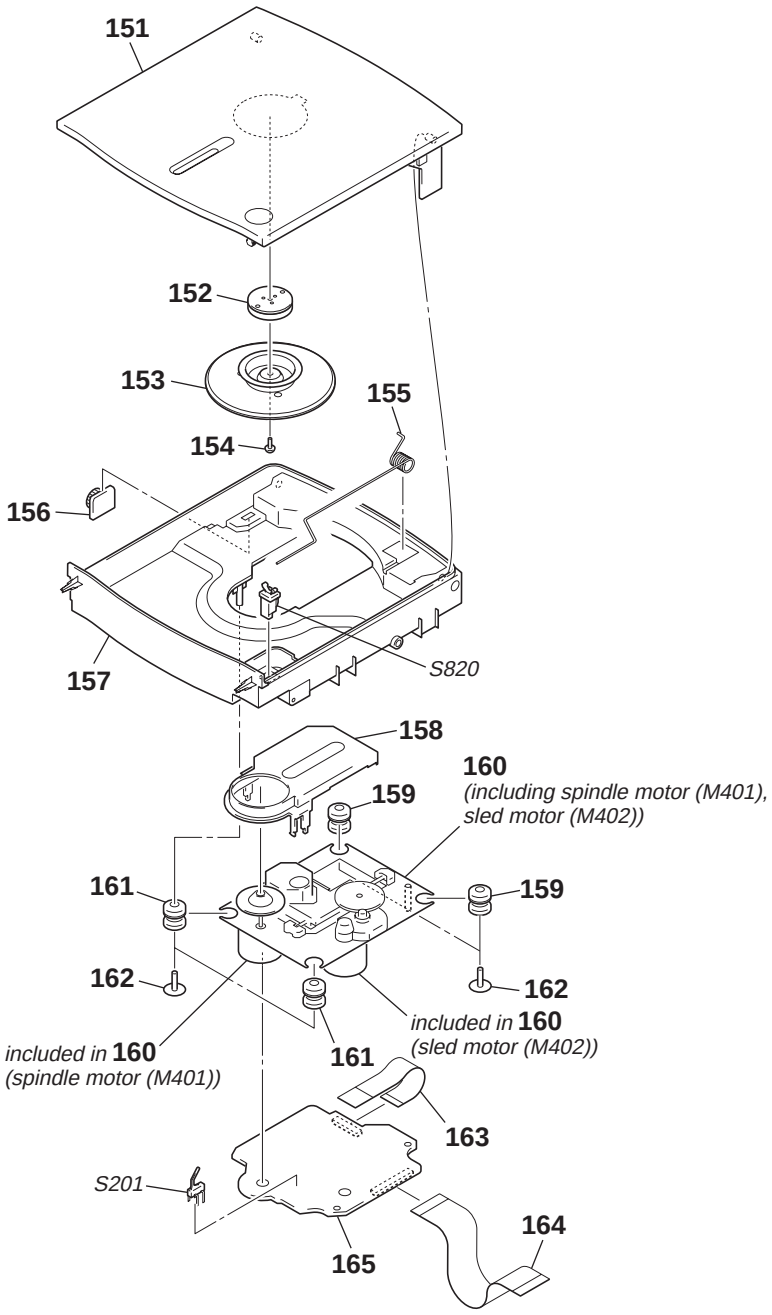

Ref. No.	Part No.	Description	Remark
151	X-2050-124-2	LID ASSY, CD	
152	1-452-899-11	MAGNET	
153	3-019-395-01	PLATE, CHUCKING	
154	3-253-143-01	SCREW (B2.6), (+) P TAPPING	
155	2-581-393-01	SPRING (CD)	
156	4-242-171-01	DAMPER 150 N	
157	2-581-388-01	CABINET (TOP) (NEZ3: US)	
157	2-581-388-11	CABINET (TOP) (NEZ3: CND, AEP, UK, EE, RU/NEZ5)	
158	4-247-493-01	COVER, CD	
159	3-931-379-21	RUBBER, VIBRATION PROOF (RED)	
⚠160	8-820-126-01	OPTICAL PICK-UP BLOCK (KSM-213CDP/C2NP) (Including spindle motor (M401), sled motor (M402))	
161	3-931-379-31	RUBBER, VIBRATION PROOF (GREEN)	
162	3-921-725-01	SCREW (2.6X10), +PWH	
163	1-827-992-11	WIRE (FLAT TYPE) (16 CORE)	
164	1-783-140-11	WIRE (FLAT TYPE) (23 CORE)	
165	A-1134-279-A	CD BOARD, COMPLETE	
S201	1-771-853-11	SWITCH, DETECTION (LIMIT)	
S820	1-692-960-21	SWITCH, PUSH (1 KEY) (CD LID OPEN/CLOSE DETECT)	

5-5. MAIN BOARD SECTION

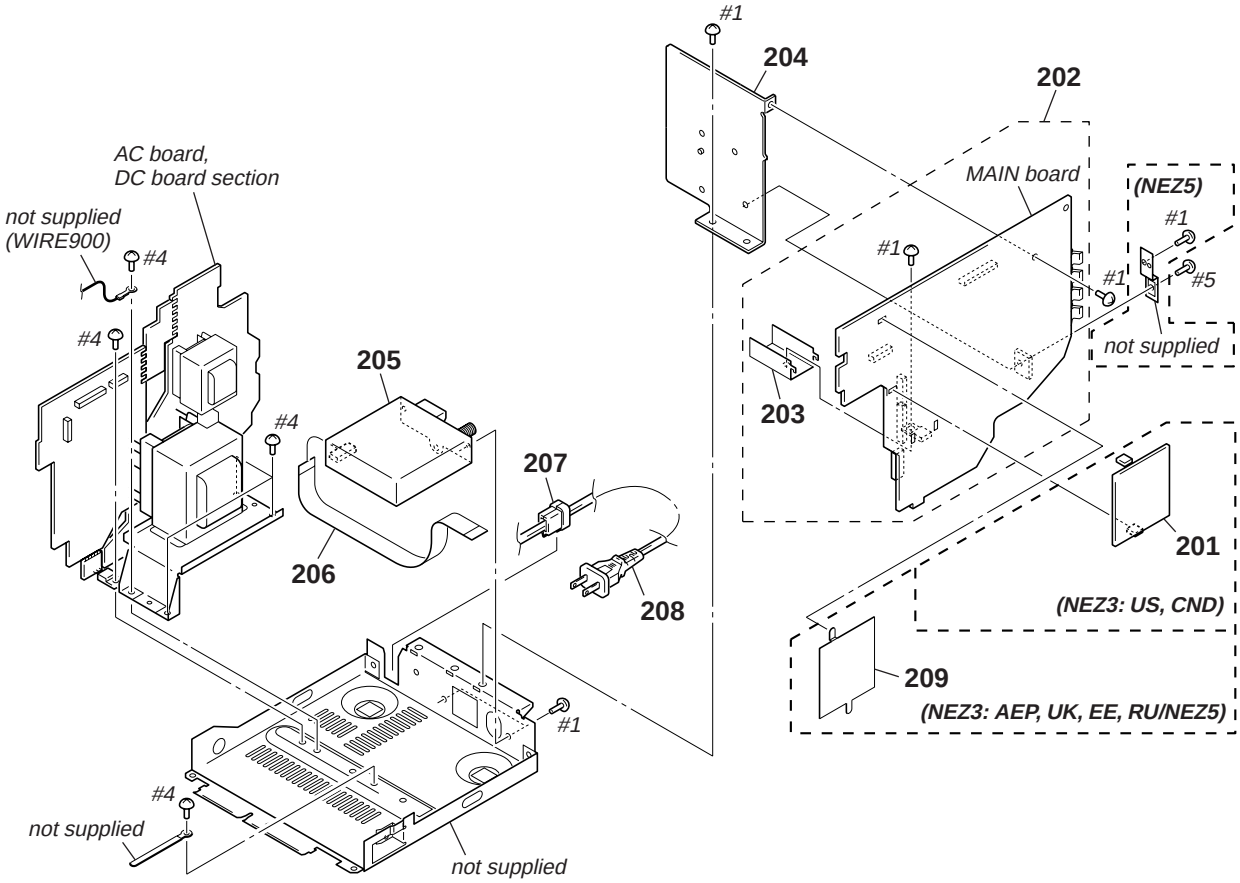

Ref. No.	Part No.	Description	Remark
201	A-1139-356-A	SHIELD BOARD, COMPLETE (NEZ3: US, CND)	
202	A-1139-350-A	MAIN BOARD, COMPLETE (NEZ3: US, CND)	
202	A-1139-421-A	MAIN BOARD, COMPLETE (NEZ5)	
202	A-1142-947-A	MAIN BOARD, COMPLETE	(NEZ3: AEP, UK, EE, RU)
203	2-586-961-01	HEAT SINK	
204	2-581-392-01	HEAT SINK (NEZ3: US, CND)	
204	2-581-392-11	HEAT SINK (NEZ3: AEP, UK, EE, RU)	
204	2-581-392-21	HEAT SINK (NEZ5)	
205	1-693-625-11	TUNER UNIT (FM/AM) (NEZ3: US, CND)	
205	1-693-626-11	TUNER UNIT (FM/AM) (NEZ5)	
205	1-693-629-11	TUNER UNIT (FM/AM) (NEZ3: AEP, UK, EE, RU)	

Ref. No.	Part No.	Description	Remark
206	1-769-946-11	WIRE (FLAT TYPE) (11 CORE) (NEZ3)	
206	1-773-011-11	WIRE (FLAT TYPE) (15 CORE) (NEZ5)	
207	3-703-244-00	BUSHING (2104), CORD	
⚠208	1-769-744-81	CORD, POWER (UK)	
⚠208	1-830-188-11	CORD, POWER (AEP, EE, RU)	
⚠208	1-830-190-11	CORD, POWER (US, CND)	
209	2-598-643-01	PLATE (M), SHIELD	(NEZ3: AEP, UK, EE, RU/NEZ5)
#1	7-685-646-79	SCREW +BVTP 3X8 TYPE2 N-S	
#4	7-685-871-01	SCREW +BVTT 3X6 (S)	
#5	7-685-647-79	SCREW +BVTP 3X10 TYPE2 N-S (NEZ3)	
#5	7-685-648-79	SCREW +BVTP 3X10 TYPE2 N-S (NEZ5)	

5-6. AC BOARD, DC BOARD SECTION

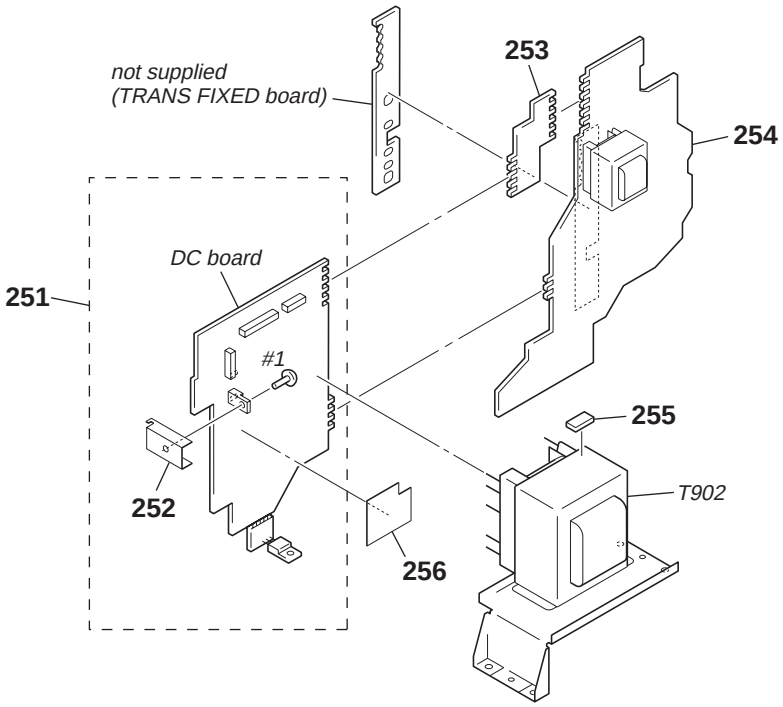

Ref. No.	Part No.	Description	Remark
251	A-1139-348-A	DC BOARD, COMPLETE	
252	2-586-961-11	HEAT SINK	
253	A-1139-357-A	CONNECT BOARD, COMPLETE (NEZ3: US, CND)	
253	A-1139-428-A	CONNECT BOARD, COMPLETE (NEZ5)	
253	A-1142-955-A	CONNECT BOARD, COMPLETE	(NEZ3: AEP, UK, EE, RU)
254	A-1139-349-A	AC BOARD, COMPLETE (NEZ3: US, CND)	
254	A-1139-398-A	AC BOARD, COMPLETE (NEZ5)	
254	A-1142-944-A	AC BOARD, COMPLETE	(NEZ3: AEP, UK, EE, RU)
255	2-594-960-11	SPACER (TRANSFORMER)	(NEZ3: AEP, UK, EE, RU/NEZ5)
255	2-594-960-21	SPACER (TRANSFORMER) (NEZ3: US, CND)	
256	2-633-205-01	INSULATED PLATE	
⚠T902	1-443-566-11	TRANSFORMER, POWER (NEZ5)	
⚠T902	1-443-573-11	TRANSFORMER, POWER	(NEZ3: AEP, UK, EE, RU)
⚠T902	1-443-626-11	TRANSFORMER, POWER (NEZ3: US, CND)	
#1	7-685-646-79	SCREW +BVTP 3X8 TYPE2 N-S	

AC CD

6. ELECTRICAL PARTS LIST

NOTE:

- Due to standardization, replacements in the parts list may be different from the parts specified in the diagrams or the components used on the set.
- -XX and -X mean standardized parts, so they may have some difference from the original one.
- RESISTORS
  All resistors are in ohms.
  METAL: Metal-film resistor.
  METAL OXIDE: Metal oxide-film resistor.
  F: nonflammable
- Abbreviation
  CND : Canadian model
  EE : East European model RU : Russian model
- Items marked "*" are not stocked since they are seldom required for routine service. Some delay should be anticipated when ordering these items.
- SEMICONDUCTORS
  In each case, u: µ, for example:
  uA... : µA... uPA... : µPA...
  uPB... : µPB... uPC... : µPC...
  uPD... : µPD...
- CAPACITORS
  uF: µF
- COILS
  uH: µH

The components identified by mark ⚠ or dotted line with mark ⚠ are critical for safety.
Replace only with part number specified.

Les composants identifiés par une marque ⚠ sont critiquens pour la sécurité.
Ne les remplacer que par une pièce portant le numéro spécifié.

When indicating parts by reference number, please include the board.

Ref. No.	Part No.	Description			Remark
	A-1139-349-A	AC BOARD, COMPLETE (NEZ3: US, CND)			
	A-1139-398-A	AC BOARD, COMPLETE (NEZ5)			
	A-1142-944-A	AC BOARD, COMPLETE (NEZ3: AEP, UK, EE, RU)			
		**********			
		< CAPACITOR >			
C914	1-126-964-11	ELECT	10uF	20%	50V
C921	1-126-767-11	ELECT	1000uF	20%	16V
⚠C931	1-113-924-11	CERAMIC	0.0047uF	20%	250V
		< CONNECTOR >			
* CN901	1-793-660-11	PIN, CONNECTOR (PC BOARD) 3P			
		< DIODE >			
D906	8-719-988-61	DIODE 1SS355TE-17			
D907	8-719-063-79	DIODE 1N4002B			
D908	8-719-063-79	DIODE 1N4002B			
D909	8-719-063-79	DIODE 1N4002B			
D910	8-719-063-79	DIODE 1N4002B			
D922	8-719-988-61	DIODE 1SS355TE-17			
D923	8-719-000-08	DIODE MC2838			
		< LINE FILTER >			
⚠LF901	1-402-663-11	TRANSFORMER, LINE FILTER (LFT)			
		< RESISTOR >			
⚠R903	1-219-512-22	METAL	2.2M	5%	1/2W F (NEZ3: US, CND)
R904	1-216-829-11	METAL CHIP	4.7K	5%	1/10W
R905	1-216-829-11	METAL CHIP	4.7K	5%	1/10W
R906	1-216-833-11	METAL CHIP	10K	5%	1/10W
R908	1-216-821-11	METAL CHIP	1K	5%	1/10W
R909	1-216-821-11	METAL CHIP	1K	5%	1/10W
		< RELAY >			
⚠RY901	1-755-276-11	RELAY, POWER			
		< TRANSFORMER >			
⚠T901	1-443-833-11	TRANSFORMER, POWER (NEZ3: US, CND)			
⚠T901	1-443-834-11	TRANSFORMER, POWER (NEZ3: AEP, UK, EE, RU/NEZ5)			
**********					

Ref. No.	Part No.	Description			Remark
	A-1134-279-A	CD BOARD, COMPLETE			
		**********			
		< CAPACITOR >			
C101	1-162-919-11	CERAMIC CHIP	22PF	5%	50V
C102	1-162-919-11	CERAMIC CHIP	22PF	5%	50V
C103	1-162-919-11	CERAMIC CHIP	22PF	5%	50V
C104	1-164-230-11	CERAMIC CHIP	220PF	5%	50V
C105	1-162-919-11	CERAMIC CHIP	22PF	5%	50V
C107	1-164-230-11	CERAMIC CHIP	220PF	5%	50V
C108	1-164-230-11	CERAMIC CHIP	220PF	5%	50V
C109	1-164-230-11	CERAMIC CHIP	220PF	5%	50V
C110	1-164-230-11	CERAMIC CHIP	220PF	5%	50V
C111	1-164-230-11	CERAMIC CHIP	220PF	5%	50V
C112	1-162-919-11	CERAMIC CHIP	22PF	5%	50V
C113	1-162-919-11	CERAMIC CHIP	22PF	5%	50V
C201	1-128-995-21	ELECT CHIP	100uF	20%	10V
C202	1-164-360-11	CERAMIC CHIP	0.1uF		16V
C203	1-128-995-21	ELECT CHIP	100uF	20%	10V
C204	1-164-360-11	CERAMIC CHIP	0.1uF		16V
C205	1-164-360-11	CERAMIC CHIP	0.1uF		16V
C206	1-164-360-11	CERAMIC CHIP	0.1uF		16V
C207	1-128-995-21	ELECT CHIP	100uF	20%	10V
C208	1-164-360-11	CERAMIC CHIP	0.1uF		16V
C210	1-164-360-11	CERAMIC CHIP	0.1uF		16V
C213	1-164-360-11	CERAMIC CHIP	0.1uF		16V
C214	1-164-360-11	CERAMIC CHIP	0.1uF		16V
C215	1-164-360-11	CERAMIC CHIP	0.1uF		16V
C217	1-164-360-11	CERAMIC CHIP	0.1uF		16V
C218	1-164-360-11	CERAMIC CHIP	0.1uF		16V
C219	1-164-360-11	CERAMIC CHIP	0.1uF		16V
C220	1-164-360-11	CERAMIC CHIP	0.1uF		16V
C221	1-164-360-11	CERAMIC CHIP	0.1uF		16V
C222	1-164-360-11	CERAMIC CHIP	0.1uF		16V
C223	1-164-360-11	CERAMIC CHIP	0.1uF		16V
C224	1-164-360-11	CERAMIC CHIP	0.1uF		16V
C226	1-165-908-11	CERAMIC CHIP	1uF	10%	10V
C227	1-165-908-11	CERAMIC CHIP	1uF	10%	10V
C230	1-162-927-11	CERAMIC CHIP	100PF	5%	50V
C232	1-164-360-11	CERAMIC CHIP	0.1uF		16V
C251	1-164-315-11	CERAMIC CHIP	470PF	5%	50V
C252	1-162-968-11	CERAMIC CHIP	0.0047uF	10%	50V
C253	1-164-315-11	CERAMIC CHIP	470PF	5%	50V
C254	1-162-968-11	CERAMIC CHIP	0.0047uF	10%	50V

CD CONNECT DC

Ref. No.	Part No.	Description			Remark
C256	1-107-826-11	CERAMIC CHIP	0.1uF	10%	16V
C257	1-107-826-11	CERAMIC CHIP	0.1uF	10%	16V
C258	1-164-230-11	CERAMIC CHIP	220PF	5%	50V
C260	1-117-863-11	CERAMIC CHIP	0.47uF	10%	6.3V
C261	1-162-970-11	CERAMIC CHIP	0.01uF	10%	25V
C264	1-162-964-11	CERAMIC CHIP	0.001uF	10%	50V
C265	1-107-826-11	CERAMIC CHIP	0.1uF	10%	16V
C266	1-162-915-11	CERAMIC CHIP	10PF	0.5PF	50V
C267	1-162-910-11	CERAMIC CHIP	5PF	0.25PF	50V
C268	1-162-915-11	CERAMIC CHIP	10PF	0.5PF	50V
C271	1-107-826-11	CERAMIC CHIP	0.1uF	10%	16V
C272	1-164-360-11	CERAMIC CHIP	0.1uF		16V
C273	1-164-315-11	CERAMIC CHIP	470PF	5%	50V
C274	1-107-826-11	CERAMIC CHIP	0.1uF	10%	16V
C275	1-162-910-11	CERAMIC CHIP	5PF	0.25PF	50V
C276	1-165-908-11	CERAMIC CHIP	1uF	10%	10V
C277	1-165-908-11	CERAMIC CHIP	1uF	10%	10V
C291	1-164-315-11	CERAMIC CHIP	470PF	5%	50V
C292	1-164-315-11	CERAMIC CHIP	470PF	5%	50V
C301	1-164-360-11	CERAMIC CHIP	0.1uF		16V
C303	1-137-710-11	CERAMIC CHIP	10uF	20%	6.3V
C304	1-165-908-11	CERAMIC CHIP	1uF	10%	10V
C321	1-162-964-11	CERAMIC CHIP	0.001uF	10%	50V
C322	1-165-908-11	CERAMIC CHIP	1uF	10%	10V
C323	1-128-995-21	ELECT CHIP	100uF	20%	10V
C401	1-128-394-11	ELECT CHIP	220uF	20%	10V
C404	1-164-360-11	CERAMIC CHIP	0.1uF		16V
C405	1-164-360-11	CERAMIC CHIP	0.1uF		16V
C406	1-164-360-11	CERAMIC CHIP	0.1uF		16V
C424	1-164-360-11	CERAMIC CHIP	0.1uF		16V
C451	1-165-176-11	CERAMIC CHIP	0.047uF	10%	16V
		< CONNECTOR >			
CN102	1-770-706-11	CONNECTOR, FFC/FPC 23P			
CN301	1-770-425-11	CONNECTOR, FFC/FPC 16P			
		< IC >			
IC201	8-753-246-30	IC CXD3014A-201R			
IC202	6-708-736-01	IC BD18KA5FP-E2			
IC402	6-705-808-01	IC BA5947FM-E2			
		< TRANSISTOR >			
Q321	6-551-120-01	TRANSISTOR	2SA2119K		
		< RESISTOR/FERRITE BEAD >			
R101	1-216-809-11	METAL CHIP	100	5%	1/10W
R102	1-216-809-11	METAL CHIP	100	5%	1/10W
R103	1-216-809-11	METAL CHIP	100	5%	1/10W
R104	1-216-809-11	METAL CHIP	100	5%	1/10W
R105	1-216-809-11	METAL CHIP	100	5%	1/10W
R107	1-216-809-11	METAL CHIP	100	5%	1/10W
R108	1-216-809-11	METAL CHIP	100	5%	1/10W
R109	1-216-809-11	METAL CHIP	100	5%	1/10W
R110	1-216-809-11	METAL CHIP	100	5%	1/10W
R111	1-216-809-11	METAL CHIP	100	5%	1/10W
R112	1-216-809-11	METAL CHIP	100	5%	1/10W

Ref. No.	Part No.	Description			Remark
R113	1-216-809-11	METAL CHIP	100	5%	1/10W
R201	1-216-295-00	SHORT CHIP	0		
R202	1-216-295-00	SHORT CHIP	0		
R203	1-500-445-21	FERRITE, EMI (SMD) (2012)			
R207	1-216-295-00	SHORT CHIP	0		
R250	1-216-857-11	METAL CHIP	1M	5%	1/10W
R252	1-216-833-11	METAL CHIP	10K	5%	1/10W
R253	1-216-821-11	METAL CHIP	1K	5%	1/10W
R254	1-216-833-11	METAL CHIP	10K	5%	1/10W
R255	1-216-821-11	METAL CHIP	1K	5%	1/10W
R256	1-216-837-11	METAL CHIP	22K	5%	1/10W
R257	1-216-845-11	METAL CHIP	100K	5%	1/10W
R258	1-216-849-11	METAL CHIP	220K	5%	1/10W
R260	1-216-864-11	SHORT CHIP	0		
R265	1-216-829-11	METAL CHIP	4.7K	5%	1/10W
R266	1-216-821-11	METAL CHIP	1K	5%	1/10W
R267	1-216-829-11	METAL CHIP	4.7K	5%	1/10W
R268	1-216-833-11	METAL CHIP	10K	5%	1/10W
R270	1-216-821-11	METAL CHIP	1K	5%	1/10W
R271	1-216-857-11	METAL CHIP	1M	5%	1/10W
R275	1-216-809-11	METAL CHIP	100	5%	1/10W
R276	1-216-841-11	METAL CHIP	47K	5%	1/10W
R277	1-216-809-11	METAL CHIP	100	5%	1/10W
R278	1-216-809-11	METAL CHIP	100	5%	1/10W
R280	1-216-864-11	SHORT CHIP	0		
R291	1-216-809-11	METAL CHIP	100	5%	1/10W
R292	1-216-809-11	METAL CHIP	100	5%	1/10W
R321	1-216-789-11	METAL CHIP	2.2	5%	1/10W
R322	1-216-789-11	METAL CHIP	2.2	5%	1/10W
R323	1-216-864-11	SHORT CHIP	0		
R324	1-216-845-11	METAL CHIP	100K	5%	1/10W
R401	1-216-295-00	SHORT CHIP	0		
R421	1-216-864-11	SHORT CHIP	0		
R423	1-216-833-11	METAL CHIP	10K	5%	1/10W
R451	1-216-837-11	METAL CHIP	22K	5%	1/10W
R452	1-216-833-11	METAL CHIP	10K	5%	1/10W
		< VIBRATOR >			
X201	1-795-101-21	VIBRATOR, CERAMIC			

****

	A-1139-357-A	CONNECT BOARD, COMPLETE (NEZ3: US, CND)
	A-1139-428-A	CONNECT BOARD, COMPLETE (NEZ5)
	A-1142-955-A	CONNECT BOARD, COMPLETE (NEZ3: AEP, UK, EE, RU)
		**********

****

	A-1139-348-A	DC BOARD, COMPLETE
		**********
	2-586-961-11	HEAT SINK
	7-685-646-79	SCREW +BVTP 3X8 TYPE2 N-S
		< CAPACITOR >

C336	1-126-965-11	ELECT	22uF	20%	50V
C350	1-126-964-11	ELECT	10uF	20%	50V
C901	1-136-497-81	FILM	0.1uF	5%	50V
C902	1-136-497-81	FILM	0.1uF	5%	50V

Ref. No.	Part No.	Description			Remark
C918	1-104-655-91	ELECT	470uF	20%	6.3V
C919	1-126-943-21	ELECT	2200uF	20%	25V
C920	1-126-933-11	ELECT	100uF	20%	16V
C922	1-126-934-11	ELECT	220uF	20%	16V
C923	1-164-156-11	CERAMIC CHIP	0.1uF		25V
C925	1-162-974-11	CERAMIC CHIP	0.01uF		50V
C930	1-164-156-11	CERAMIC CHIP	0.1uF		25V
		< CONNECTOR >			
CN900	1-568-828-11	CONNECTOR, FFC 9P			
CN902	1-819-134-11	PIN, CONNECTOR 6P			
CN903	1-819-132-11	PIN, CONNECTOR 4P			
		< DIODE >			
D322	8-719-000-07	DIODE MC2836			
D911	8-719-063-79	DIODE 1N4002B			
D912	8-719-063-79	DIODE 1N4002B			
D913	8-719-063-79	DIODE 1N4002B			
D914	8-719-063-79	DIODE 1N4002B			
D916	8-719-046-47	DIODE 1N5401TM			
D917	8-719-046-47	DIODE 1N5401TM			
D918	8-719-046-47	DIODE 1N5401TM			
D919	8-719-046-47	DIODE 1N5401TM			
D920	8-719-000-08	DIODE MC2838			
D926	8-719-063-79	DIODE 1N4002B			
D927	8-719-063-79	DIODE 1N4002B			
D928	8-719-063-79	DIODE 1N4002B			
D936	8-719-988-61	DIODE 1SS355TE-17			
		< IC >			
IC900	8-759-231-57	IC TA7810S			
IC901	6-702-771-01	IC TA78033LS			
IC903	6-703-546-01	IC TA7804LS			
		< TRANSISTOR >			
Q315	8-729-142-46	TRANSISTOR	2SC2001-LK		
Q333	8-729-027-43	TRANSISTOR	DTC114EKA-T146		
Q338	8-729-027-43	TRANSISTOR	DTC114EKA-T146		
		< RESISTOR >			
R901	1-216-841-11	METAL CHIP	47K	5%	1/10W
R902	1-216-841-11	METAL CHIP	47K	5%	1/10W
R907	1-216-841-11	METAL CHIP	47K	5%	1/10W
R911	1-216-841-11	METAL CHIP	47K	5%	1/10W
R912	1-216-841-11	METAL CHIP	47K	5%	1/10W
R913	1-216-841-11	METAL CHIP	47K	5%	1/10W
R914	1-216-829-11	METAL CHIP	4.7K	5%	1/10W
R915	1-216-837-11	METAL CHIP	22K	5%	1/10W
R916	1-216-841-11	METAL CHIP	47K	5%	1/10W
R919	1-216-841-11	METAL CHIP	47K	5%	1/10W

****

Ref. No.	Part No.	Description			Remark
	A-1139-347-A	HEAD PHONE BOARD, COMPLETE			(NEZ3: US, CND)
	A-1139-427-A	HEAD PHONE BOARD, COMPLETE (NEZ5)			
	A-1142-959-A	HEAD PHONE BOARD, COMPLETE			(NEZ3: AEP, UK, EE, RU)
		**********			
		< CAPACITOR >			
C520	1-162-974-11	CERAMIC CHIP	0.01uF		50V
C521	1-162-974-11	CERAMIC CHIP	0.01uF		50V
		< FLAT TYPE WIRE >			
FFC501	1-830-584-12	CABLE, FLEXIBLE FLAT (13 CORE)			
		< JACK >			
J500	1-793-829-11	JACK, HEADPHONE (PHONES)			
		< RESISTOR >			
R519	1-216-817-11	METAL CHIP	470	5%	1/10W
R520	1-216-817-11	METAL CHIP	470	5%	1/10W
R525	1-216-817-11	METAL CHIP	470	5%	1/10W
R526	1-216-817-11	METAL CHIP	470	5%	1/10W
R527	1-216-817-11	METAL CHIP	470	5%	1/10W
R528	1-216-817-11	METAL CHIP	470	5%	1/10W
R529	1-216-809-11	METAL CHIP	100	5%	1/10W (NEZ3: US, CND)
R529	1-216-813-11	METAL CHIP	220	5%	1/10W (NEZ3: AEP, UK, EE, RU)
R529	1-216-817-11	METAL CHIP	470	5%	1/10W (NEZ5)
R530	1-216-809-11	METAL CHIP	100	5%	1/10W (NEZ3: US, CND)
R530	1-216-813-11	METAL CHIP	220	5%	1/10W (NEZ3: AEP, UK, EE, RU)
R530	1-216-817-11	METAL CHIP	470	5%	1/10W (NEZ5)
R531	1-216-809-11	METAL CHIP	100	5%	1/10W (NEZ3: US, CND)
R531	1-216-813-11	METAL CHIP	220	5%	1/10W (NEZ3: AEP, UK, EE, RU)
R531	1-216-817-11	METAL CHIP	470	5%	1/10W (NEZ5)
R532	1-216-809-11	METAL CHIP	100	5%	1/10W (NEZ3: US, CND)
R532	1-216-813-11	METAL CHIP	220	5%	1/10W (NEZ3: AEP, UK, EE, RU)
R532	1-216-817-11	METAL CHIP	470	5%	1/10W (NEZ5)
R533	1-216-809-11	METAL CHIP	100	5%	1/10W (NEZ3: US, CND)
R533	1-216-813-11	METAL CHIP	220	5%	1/10W (NEZ3: AEP, UK, EE, RU)
R533	1-216-817-11	METAL CHIP	470	5%	1/10W (NEZ5)
R534	1-216-809-11	METAL CHIP	100	5%	1/10W (NEZ3: US, CND)
R534	1-216-813-11	METAL CHIP	220	5%	1/10W (NEZ3: AEP, UK, EE, RU)
R534	1-216-817-11	METAL CHIP	470	5%	1/10W (NEZ5)

****

MAIN

Ref. No.	Part No.	Description			Remark
	A-1139-350-A	MAIN BOARD, COMPLETE (NEZ3: US, CND)			
	A-1139-421-A	MAIN BOARD, COMPLETE (NEZ5)			
	A-1142-947-A	MAIN BOARD, COMPLETE (NEZ3: AEP, UK, EE, RU)			
		**********			
	2-586-961-01	HEAT SINK			
	2-598-643-01	PLATE (M), SHIELD (NEZ3: AEP, UK, EE, RU/NEZ5)			
	7-685-646-79	SCREW +BVTP 3X8 TYPE2 N-S			
		< CAPACITOR/JUMPER RESISTOR >			
C101	1-162-964-11	CERAMIC CHIP	0.001uF	10%	50V
C102	1-162-966-11	CERAMIC CHIP	0.0022uF	10%	50V
C103	1-162-927-11	CERAMIC CHIP	100PF	5%	50V
C104	1-104-665-11	ELECT	100uF	20%	25V
C106	1-164-227-11	CERAMIC CHIP	0.022uF	10%	25V
C107	1-126-961-11	ELECT	2.2uF	20%	50V
C108	1-162-968-11	CERAMIC CHIP	0.0047uF	10%	50V
C111	1-162-964-11	CERAMIC CHIP	0.001uF	10%	50V
C113	1-126-957-11	ELECT	0.22uF	20%	50V
C114	1-126-959-11	ELECT	0.47uF	20%	50V
C115	1-126-964-11	ELECT	10uF	20%	50V
C116	1-162-962-11	CERAMIC CHIP	470PF	10%	50V
C117	1-162-964-11	CERAMIC CHIP	0.001uF	10%	50V
C118	1-165-176-11	CERAMIC CHIP	0.047uF	10%	16V
C119	1-162-974-11	CERAMIC CHIP	0.01uF		50V
C120	1-162-960-11	CERAMIC CHIP	220PF	10%	50V
C121	1-216-864-11	SHORT CHIP	0		
C126	1-162-960-11	CERAMIC CHIP	220PF	10%	50V
C127	1-162-962-11	CERAMIC CHIP	470PF	10%	50V
C133	1-130-491-00	MYLAR	0.047uF	5%	50V
C135	1-126-964-11	ELECT	10uF	20%	50V
C136	1-126-964-11	ELECT	10uF	20%	50V
C138	1-126-965-11	ELECT	22uF	20%	50V
C139	1-162-962-11	CERAMIC CHIP	470PF	10%	50V
C140	1-162-960-11	CERAMIC CHIP	220PF	10%	50V
C201	1-162-964-11	CERAMIC CHIP	0.001uF	10%	50V
C202	1-162-966-11	CERAMIC CHIP	0.0022uF	10%	50V
C203	1-162-927-11	CERAMIC CHIP	100PF	5%	50V
C204	1-104-665-11	ELECT	100uF	20%	25V
C206	1-164-227-11	CERAMIC CHIP	0.022uF	10%	25V
C207	1-126-961-11	ELECT	2.2uF	20%	50V
C208	1-162-968-11	CERAMIC CHIP	0.0047uF	10%	50V
C211	1-162-964-11	CERAMIC CHIP	0.001uF	10%	50V
C213	1-126-957-11	ELECT	0.22uF	20%	50V
C214	1-126-959-11	ELECT	0.47uF	20%	50V
C215	1-126-964-11	ELECT	10uF	20%	50V
C216	1-162-962-11	CERAMIC CHIP	470PF	10%	50V
C217	1-162-964-11	CERAMIC CHIP	0.001uF	10%	50V
C218	1-165-176-11	CERAMIC CHIP	0.047uF	10%	16V
C219	1-162-974-11	CERAMIC CHIP	0.01uF		50V
C220	1-162-960-11	CERAMIC CHIP	220PF	10%	50V
C221	1-216-864-11	SHORT CHIP	0		
C226	1-162-960-11	CERAMIC CHIP	220PF	10%	50V
C227	1-162-962-11	CERAMIC CHIP	470PF	10%	50V
C233	1-130-491-00	MYLAR	0.047uF	5%	50V
C235	1-126-964-11	ELECT	10uF	20%	50V
C236	1-126-964-11	ELECT	10uF	20%	50V
C238	1-126-965-11	ELECT	22uF	20%	50V
C239	1-162-962-11	CERAMIC CHIP	470PF	10%	50V
C240	1-162-960-11	CERAMIC CHIP	220PF	10%	50V
C301	1-162-915-11	CERAMIC CHIP	10PF	0.5PF	50V
C302	1-126-934-11	ELECT	220uF	20%	16V
C303	1-130-479-00	MYLAR	0.0047uF	5%	50V
C304	1-130-479-00	MYLAR	0.0047uF	5%	50V
C305	1-126-934-11	ELECT	220uF	20%	16V
C306	1-162-974-11	CERAMIC CHIP	0.01uF		50V
C309	1-126-926-11	ELECT	1000uF	20%	10V
C310	1-162-927-11	CERAMIC CHIP	100PF	5%	50V
C311	1-162-927-11	CERAMIC CHIP	100PF	5%	50V
C312	1-126-963-11	ELECT	4.7uF	20%	50V
C313	1-126-933-11	ELECT	100uF	20%	16V
C314	1-130-483-00	MYLAR	0.01uF	5%	50V
C315	1-162-927-11	CERAMIC CHIP	100PF	5%	50V
C316	1-162-927-11	CERAMIC CHIP	100PF	5%	50V
C317	1-162-919-11	CERAMIC CHIP	22PF	5%	50V
C318	1-162-927-11	CERAMIC CHIP	100PF	5%	50V
C319	1-162-927-11	CERAMIC CHIP	100PF	5%	50V
C320	1-107-826-11	CERAMIC CHIP	0.1uF	10%	16V
C321	1-162-927-11	CERAMIC CHIP	100PF	5%	50V
C322	1-162-927-11	CERAMIC CHIP	100PF	5%	50V
C324	1-126-963-11	ELECT	4.7uF	20%	50V (NEZ5)
C325	1-162-927-11	CERAMIC CHIP	100PF	5%	50V
C326	1-162-927-11	CERAMIC CHIP	100PF	5%	50V
C327	1-162-927-11	CERAMIC CHIP	100PF	5%	50V
C328	1-107-826-11	CERAMIC CHIP	0.1uF	10%	16V
C330	1-162-966-11	CERAMIC CHIP	0.0022uF	10%	50V
C331	1-115-467-11	CERAMIC CHIP	0.22uF	10%	50V
C332	1-162-964-11	CERAMIC CHIP	0.001uF	10%	50V
C335	1-126-933-11	ELECT	100uF	20%	16V
C351	1-104-665-11	ELECT	100uF	20%	25V
C352	1-126-953-11	ELECT	2200uF	20%	35V
C353	1-126-953-11	ELECT	2200uF	20%	35V
C354	1-126-947-11	ELECT	47uF	20%	35V
C355	1-130-487-00	MYLAR	0.022uF	5%	50V
C356	1-130-471-00	MYLAR	0.001uF	5%	50V
C358	1-130-483-00	MYLAR	0.01uF	5%	50V
C362	1-126-964-11	ELECT	10uF	20%	50V
C363	1-126-964-11	ELECT	10uF	20%	50V
C364	1-126-964-11	ELECT	10uF	20%	50V
C366	1-162-960-11	CERAMIC CHIP	220PF	10%	50V
C371	1-162-964-11	CERAMIC CHIP	0.001uF	10%	50V
C501	1-162-927-11	CERAMIC CHIP	100PF	5%	50V
C502	1-162-962-11	CERAMIC CHIP	470PF	10%	50V
C503	1-126-947-11	ELECT	47uF	20%	35V
C504	1-162-962-11	CERAMIC CHIP	470PF	10%	50V
C505	1-162-927-11	CERAMIC CHIP	100PF	5%	50V
C506	1-126-947-11	ELECT	47uF	20%	35V
C507	1-162-964-11	CERAMIC CHIP	0.001uF	10%	50V
C508	1-162-964-11	CERAMIC CHIP	0.001uF	10%	50V
C509	1-162-995-11	CERAMIC CHIP	0.022uF		50V
C510	1-162-964-11	CERAMIC CHIP	0.001uF	10%	50V
C511	1-126-957-11	ELECT	0.22uF	20%	50V
C512	1-136-169-00	FILM	0.22uF	5%	50V

Ref. No.	Part No.	Description			Remark
C513	1-126-957-11	ELECT	0.22uF	20%	50V
C514	1-136-169-00	FILM	0.22uF	5%	50V
C516	1-126-933-11	ELECT	100uF	20%	16V
C523	1-162-962-11	CERAMIC CHIP	470PF	10%	50V
C524	1-162-962-11	CERAMIC CHIP	470PF	10%	50V
		< CONNECTOR >			
* CN301	1-815-448-11	PIN, CONNECTOR (PWB) 7P			
CN313	1-819-131-11	PIN, CONNECTOR 3P (NEZ5)			
CN317	1-779-291-11	CONNECTOR, FFC (LIF (NON-ZIF)) 23P			
CN319	1-568-830-11	CONNECTOR, FFC 11P (NEZ3)			
CN319	1-784-776-11	CONNECTOR, FFC 15P (NEZ5)			
CN320	1-784-774-11	CONNECTOR, FFC 13P (NEZ3)			
CN320	1-784-776-11	CONNECTOR, FFC 15P (NEZ5)			
CN321	1-784-778-11	CONNECTOR, FFC 17P			
CN500	1-784-735-11	CONNECTOR, FFC 13P			
		< DIODE >			
D303	8-719-063-79	DIODE 1N4002B			
D304	8-719-063-79	DIODE 1N4002B			
D307	8-719-000-07	DIODE MC2836			
D313	8-719-000-08	DIODE MC2838 (NEZ5)			
D319	6-500-848-01	DIODE MC2840-T112-1			
D320	6-500-848-01	DIODE MC2840-T112-1			
D321	8-719-988-61	DIODE 1SS355TE-17			
D323	8-719-083-60	DIODE UDZSTE-174.7B			
D324	8-719-083-60	DIODE UDZSTE-174.7B			
D325	6-500-848-01	DIODE MC2840-T112-1			
D327	6-500-848-01	DIODE MC2840-T112-1			
		< JUMPER RESISTOR >			
FB304	1-216-864-11	SHORT CHIP	0		
FB305	1-216-864-11	SHORT CHIP	0		
FB306	1-216-864-11	SHORT CHIP	0		
FB317	1-216-864-11	SHORT CHIP	0		
		< IC >			
IC302	6-702-895-01	IC BD3881FV			
IC303	8-759-701-59	IC NJM78M09FA			
IC501	8-759-333-24	IC LM1876TF			
		< JACK >			
J302	1-780-275-11	TERMINAL BOARD, PUSH (4P) (SPEAKER)			
J321	1-815-629-11	JACK (AUDIO IN)			
		< JUMPER RESISTOR >			
JR152	1-216-864-11	SHORT CHIP	0		
		< COIL >			
L101	1-422-009-13	COIL, AIR-CORE			
L201	1-422-009-13	COIL, AIR-CORE			
		< TRANSISTOR >			
Q316	8-729-120-28	TRANSISTOR	2SC1623-L5L6 (NEZ5)		
Q317	8-729-040-76	TRANSISTOR	KTA1273-Y-AT (NEZ5)		
Q326	8-729-120-28	TRANSISTOR	2SC1623-L5L6		
Q327	8-729-120-28	TRANSISTOR	2SC1623-L5L6		

Ref. No.	Part No.	Description			Remark
Q328	8-729-120-28	TRANSISTOR	2SC1623-L5L6		
Q329	8-729-120-28	TRANSISTOR	2SC1623-L5L6		
Q332	8-729-600-22	TRANSISTOR	2SA1235-F		
Q334	8-729-120-28	TRANSISTOR	2SC1623-L5L6		
Q335	8-729-120-28	TRANSISTOR	2SC1623-L5L6		
Q342	8-729-600-22	TRANSISTOR	2SA1235-F		
Q343	8-729-120-28	TRANSISTOR	2SC1623-L5L6		
Q344	8-729-142-46	TRANSISTOR	2SC2001-LK		
Q347	8-729-037-03	TRANSISTOR	KTA1266GR-AT		
Q348	8-729-027-43	TRANSISTOR	DTC114EKA-T146		
		< RESISTOR >			
R100	1-216-833-11	METAL CHIP	10K	5%	1/10W
R101	1-216-841-11	METAL CHIP	47K	5%	1/10W
R102	1-216-841-11	METAL CHIP	47K	5%	1/10W
R103	1-216-817-11	METAL CHIP	470	5%	1/10W
R104	1-216-805-11	METAL CHIP	47	5%	1/10W
R105	1-216-849-11	METAL CHIP	220K	5%	1/10W
R106	1-216-829-11	METAL CHIP	4.7K	5%	1/10W
R107	1-216-845-11	METAL CHIP	100K	5%	1/10W
R108	1-216-833-11	METAL CHIP	10K	5%	1/10W
R109	1-216-829-11	METAL CHIP	4.7K	5%	1/10W
R110	1-216-821-11	METAL CHIP	1K	5%	1/10W
R111	1-216-837-11	METAL CHIP	22K	5%	1/10W
R112	1-216-837-11	METAL CHIP	22K	5%	1/10W
R114	1-216-829-11	METAL CHIP	4.7K	5%	1/10W
R116	1-216-841-11	METAL CHIP	47K	5%	1/10W
R117	1-216-825-11	METAL CHIP	2.2K	5%	1/10W
R118	1-216-833-11	METAL CHIP	10K	5%	1/10W
R119	1-216-833-11	METAL CHIP	10K	5%	1/10W
R120	1-216-833-11	METAL CHIP	10K	5%	1/10W
R121	1-216-825-11	METAL CHIP	2.2K	5%	1/10W
R122	1-216-853-11	METAL CHIP	470K	5%	1/10W
R123	1-216-825-11	METAL CHIP	2.2K	5%	1/10W
R124	1-216-837-11	METAL CHIP	22K	5%	1/10W
R125	1-216-837-11	METAL CHIP	22K	5%	1/10W
R126	1-216-837-11	METAL CHIP	22K	5%	1/10W
R128	1-216-821-11	METAL CHIP	1K	5%	1/10W
R129	1-216-793-11	METAL CHIP	4.7	5%	1/10W
R130	1-216-793-11	METAL CHIP	4.7	5%	1/10W
R131	1-216-821-11	METAL CHIP	1K	5%	1/10W
R132	1-216-821-11	METAL CHIP	1K	5%	1/10W
R133	1-216-864-11	SHORT CHIP	0		
R134	1-216-864-11	SHORT CHIP	0		
R135	1-216-845-11	METAL CHIP	100K	5%	1/10W
R136	1-216-833-11	METAL CHIP	10K	5%	1/10W
R137	1-216-829-11	METAL CHIP	4.7K	5%	1/10W
R138	1-216-825-11	METAL CHIP	2.2K	5%	1/10W
R139	1-216-837-11	METAL CHIP	22K	5%	1/10W
R143	1-216-833-11	METAL CHIP	10K	5%	1/10W
R145	1-216-864-11	SHORT CHIP	0		
R147	1-216-837-11	METAL CHIP	22K	5%	1/10W
R148	1-216-825-11	METAL CHIP	2.2K	5%	1/10W
R149	1-216-833-11	METAL CHIP	10K	5%	1/10W
R200	1-216-833-11	METAL CHIP	10K	5%	1/10W
R201	1-216-841-11	METAL CHIP	47K	5%	1/10W
R202	1-216-841-11	METAL CHIP	47K	5%	1/10W

MAIN

Ref. No.	Part No.	Description			Remark
R203	1-216-817-11	METAL CHIP	470	5%	1/10W
R204	1-216-805-11	METAL CHIP	47	5%	1/10W
R205	1-216-849-11	METAL CHIP	220K	5%	1/10W
R206	1-216-829-11	METAL CHIP	4.7K	5%	1/10W
R207	1-216-845-11	METAL CHIP	100K	5%	1/10W
R208	1-216-833-11	METAL CHIP	10K	5%	1/10W
R209	1-216-829-11	METAL CHIP	4.7K	5%	1/10W
R210	1-216-821-11	METAL CHIP	1K	5%	1/10W
R211	1-216-837-11	METAL CHIP	22K	5%	1/10W
R212	1-216-837-11	METAL CHIP	22K	5%	1/10W
R214	1-216-829-11	METAL CHIP	4.7K	5%	1/10W
R216	1-216-841-11	METAL CHIP	47K	5%	1/10W
R217	1-216-825-11	METAL CHIP	2.2K	5%	1/10W
R218	1-216-833-11	METAL CHIP	10K	5%	1/10W
R219	1-216-833-11	METAL CHIP	10K	5%	1/10W
R220	1-216-833-11	METAL CHIP	10K	5%	1/10W
R221	1-216-825-11	METAL CHIP	2.2K	5%	1/10W
R222	1-216-853-11	METAL CHIP	470K	5%	1/10W
R223	1-216-825-11	METAL CHIP	2.2K	5%	1/10W
R224	1-216-837-11	METAL CHIP	22K	5%	1/10W
R225	1-216-837-11	METAL CHIP	22K	5%	1/10W
R226	1-216-837-11	METAL CHIP	22K	5%	1/10W
R228	1-216-821-11	METAL CHIP	1K	5%	1/10W
R229	1-216-793-11	METAL CHIP	4.7	5%	1/10W
R230	1-216-793-11	METAL CHIP	4.7	5%	1/10W
R231	1-216-821-11	METAL CHIP	1K	5%	1/10W
R232	1-216-821-11	METAL CHIP	1K	5%	1/10W
R233	1-216-864-11	SHORT CHIP	0		
R234	1-216-864-11	SHORT CHIP	0		
R235	1-216-845-11	METAL CHIP	100K	5%	1/10W
R236	1-216-833-11	METAL CHIP	10K	5%	1/10W
R237	1-216-829-11	METAL CHIP	4.7K	5%	1/10W
R238	1-216-825-11	METAL CHIP	2.2K	5%	1/10W
R239	1-216-837-11	METAL CHIP	22K	5%	1/10W
R243	1-216-833-11	METAL CHIP	10K	5%	1/10W
R245	1-216-864-11	SHORT CHIP	0		
R247	1-216-837-11	METAL CHIP	22K	5%	1/10W
R248	1-216-825-11	METAL CHIP	2.2K	5%	1/10W
R249	1-216-833-11	METAL CHIP	10K	5%	1/10W
R301	1-216-837-11	METAL CHIP	22K	5%	1/10W
R302	1-216-845-11	METAL CHIP	100K	5%	1/10W
R303	1-216-833-11	METAL CHIP	10K	5%	1/10W
R304	1-216-829-11	METAL CHIP	4.7K	5%	1/10W
R305	1-216-825-11	METAL CHIP	2.2K	5%	1/10W
R306	1-216-825-11	METAL CHIP	2.2K	5%	1/10W
R307	1-216-821-11	METAL CHIP	1K	5%	1/10W
R308	1-216-821-11	METAL CHIP	1K	5%	1/10W
R309	1-216-821-11	METAL CHIP	1K	5%	1/10W
R310	1-216-829-11	METAL CHIP	4.7K	5%	1/10W
R311	1-216-793-11	METAL CHIP	4.7	5%	1/10W
R312	1-216-793-11	METAL CHIP	4.7	5%	1/10W
R313	1-216-825-11	METAL CHIP	2.2K	5%	1/10W
R314	1-216-833-11	METAL CHIP	10K	5%	1/10W
R315	1-216-833-11	METAL CHIP	10K	5%	1/10W
R316	1-216-833-11	METAL CHIP	10K	5%	1/10W
R317	1-216-833-11	METAL CHIP	10K	5%	1/10W
R318	1-216-825-11	METAL CHIP	2.2K	5%	1/10W (NEZ5)
R319	1-216-837-11	METAL CHIP	22K	5%	1/10W
R328	1-216-833-11	METAL CHIP	10K	5%	1/10W (NEZ5)
R329	1-216-845-11	METAL CHIP	100K	5%	1/10W (NEZ5)
R330	1-216-841-11	METAL CHIP	47K	5%	1/10W (NEZ5)
R331	1-216-841-11	METAL CHIP	47K	5%	1/10W (NEZ5)
R358	1-216-841-11	METAL CHIP	47K	5%	1/10W
R362	1-216-837-11	METAL CHIP	22K	5%	1/10W
R366	1-216-837-11	METAL CHIP	22K	5%	1/10W
R367	1-216-825-11	METAL CHIP	2.2K	5%	1/10W
R368	1-216-833-11	METAL CHIP	10K	5%	1/10W
R369	1-216-833-11	METAL CHIP	10K	5%	1/10W
R370	1-216-833-11	METAL CHIP	10K	5%	1/10W
R371	1-216-833-11	METAL CHIP	10K	5%	1/10W
R376	1-216-845-11	METAL CHIP	100K	5%	1/10W
R377	1-216-817-11	METAL CHIP	470	5%	1/10W
R378	1-216-817-11	METAL CHIP	470	5%	1/10W
R379	1-216-817-11	METAL CHIP	470	5%	1/10W
R380	1-216-817-11	METAL CHIP	470	5%	1/10W
R381	1-216-817-11	METAL CHIP	470	5%	1/10W
R382	1-216-817-11	METAL CHIP	470	5%	1/10W
R383	1-216-813-11	METAL CHIP	220	5%	1/10W
R384	1-216-813-11	METAL CHIP	220	5%	1/10W
R385	1-260-095-11	CARBON	470	5%	1/2W (NEZ3: US, CND)
R385	1-260-328-11	CARBON	1K	5%	1/2W (NEZ3: AEP, UK, EE, RU/NEZ5)
R386	1-260-087-11	CARBON	100	5%	1/2W (NEZ3: AEP, UK, EE, RU)
R386	1-260-095-11	CARBON	470	5%	1/2W (NEZ3: US, CND/NEZ5)
R387	1-216-833-11	METAL CHIP	10K	5%	1/10W
R388	1-216-833-11	METAL CHIP	10K	5%	1/10W
R389	1-216-833-11	METAL CHIP	10K	5%	1/10W
R390	1-216-845-11	METAL CHIP	100K	5%	1/10W
R501	1-216-821-11	METAL CHIP	1K	5%	1/10W
R502	1-216-841-11	METAL CHIP	47K	5%	1/10W
R503	1-216-817-11	METAL CHIP	470	5%	1/10W
R504	1-216-841-11	METAL CHIP	47K	5%	1/10W
R505	1-216-841-11	METAL CHIP	47K	5%	1/10W
R506	1-216-821-11	METAL CHIP	1K	5%	1/10W
R507	1-216-833-11	METAL CHIP	10K	5%	1/10W
R508	1-216-817-11	METAL CHIP	470	5%	1/10W
R509	1-216-841-11	METAL CHIP	47K	5%	1/10W
R511	1-216-837-11	METAL CHIP	22K	5%	1/10W
R512	1-216-837-11	METAL CHIP	22K	5%	1/10W
R514	1-216-833-11	METAL CHIP	10K	5%	1/10W
⚠R515	1-216-373-81	METAL OXIDE	2.2	5%	2W F
⚠R516	1-216-373-81	METAL OXIDE	2.2	5%	2W F
R517	1-216-841-11	METAL CHIP	47K	5%	1/10W
R518	1-216-841-11	METAL CHIP	47K	5%	1/10W
R521	1-216-833-11	METAL CHIP	10K	5%	1/10W
R523	1-216-809-11	METAL CHIP	100	5%	1/10W (NEZ3: AEP, UK, EE, RU)
R523	1-216-813-11	METAL CHIP	220	5%	1/10W (NEZ3: US, CND)

Ref. No.	Part No.	Description			Remark
R523	1-216-864-11	SHORT CHIP	0 (NEZ5)		
R524	1-216-809-11	METAL CHIP	100	5%	1/10W (NEZ3: AEP, UK, EE, RU)
R524	1-216-813-11	METAL CHIP	220	5%	1/10W (NEZ3: US, CND)
R524	1-216-864-11	SHORT CHIP	0 (NEZ5)		
		< TRANSFORMER >			
T301	1-443-760-11	TRANSFORMER, BIAS OSCILLATION			
**********					
	A-1139-353-A	PANEL BOARD, COMPLETE (NEZ3: US, CND)			
	A-1139-425-A	PANEL BOARD, COMPLETE (NEZ5)			
	A-1142-952-A	PANEL BOARD, COMPLETE (NEZ3: AEP, UK, EE, RU)			
		**********			
	2-581-390-01	HOLDER (LCD)			
	2-581-391-01	PLATE, LIGHT GUIDE			
	2-586-988-11	SHEET (LCD), DIFFUSION			
		< CAPACITOR >			
C701	1-107-726-91	CERAMIC CHIP	0.01uF	10%	16V (NEZ5)
C702	1-107-726-91	CERAMIC CHIP	0.01uF	10%	16V (NEZ5)
C801	1-124-234-00	ELECT	22uF	20%	16V
C802	1-124-584-00	ELECT	100uF	20%	6.3V
C803	1-107-726-91	CERAMIC CHIP	0.01uF	10%	16V
C804	1-107-726-91	CERAMIC CHIP	0.01uF	10%	16V
C805	1-164-360-11	CERAMIC CHIP	0.1uF		16V
C806	1-107-726-91	CERAMIC CHIP	0.01uF	10%	16V
C807	1-126-518-11	ELECT	470uF	20%	4V
C808	1-124-589-11	ELECT	47uF	20%	16V
C809	1-124-234-00	ELECT	22uF	20%	16V
C810	1-107-726-91	CERAMIC CHIP	0.01uF	10%	16V
C811	1-126-157-11	ELECT	10uF	20%	16V
C812	1-162-962-11	CERAMIC CHIP	470PF	10%	50V
C815	1-162-964-11	CERAMIC CHIP	0.001uF	10%	50V
C816	1-107-726-91	CERAMIC CHIP	0.01uF	10%	16V
C817	1-107-726-91	CERAMIC CHIP	0.01uF	10%	16V
C818	1-126-518-11	ELECT	470uF	20%	4V
C819	1-162-919-11	CERAMIC CHIP	22PF	5%	50V
C820	1-164-816-11	CERAMIC CHIP	220PF	2%	50V
C821	1-164-816-11	CERAMIC CHIP	220PF	2%	50V
C822	1-162-919-11	CERAMIC CHIP	22PF	5%	50V
C823	1-107-726-91	CERAMIC CHIP	0.01uF	10%	16V
C826	1-164-360-11	CERAMIC CHIP	0.1uF		16V
C827	1-164-360-11	CERAMIC CHIP	0.1uF		16V
C828	1-164-360-11	CERAMIC CHIP	0.1uF		16V
C829	1-107-726-91	CERAMIC CHIP	0.01uF	10%	16V
C831	1-164-360-11	CERAMIC CHIP	0.1uF		16V
C832	1-164-360-11	CERAMIC CHIP	0.1uF		16V
C833	1-107-726-91	CERAMIC CHIP	0.01uF	10%	16V
C834	1-107-726-91	CERAMIC CHIP	0.01uF	10%	16V
C859	1-124-259-11	ELECT	4.7uF	20%	50V
		< DIODE >			
D801	8-719-988-61	DIODE 1SS355TE-17			

Ref. No.	Part No.	Description			Remark
D804	6-501-138-01	LED SELU2WA10C-LF62 (LCD BACK LIGHT)			(NEZ5)
D804	6-501-139-01	LED SELU2B10A-SLF62 (LCD BACK LIGHT)			(NEZ3)
D805	6-501-138-01	LED SELU2WA10C-LF62 (LCD BACK LIGHT)			(NEZ5)
D805	6-501-139-01	LED SELU2B10A-SLF62 (LCD BACK LIGHT)			(NEZ3)
D806	8-719-063-93	LED SLR325VC-N-T32 (STANDBY)			
D807	8-719-988-61	DIODE 1SS355TE-17			
D809	8-719-000-07	DIODE MC2836			
		< FLAT TYPE WIRE >			
FFC801	1-830-583-11	CABLE, FLEXIBLE FLAT (7 CORE)			
FFC803	1-830-579-11	CABLE, FLEXIBLE FLAT (9 CORE)			
FFC804	1-831-520-11	CABLE, FLEXIBLE FLAT (13 CORE) (NEZ3)			
FFC804	1-831-521-11	CABLE, FLEXIBLE FLAT (15 CORE) (NEZ5)			
FFC805	1-830-901-11	CABLE, FLEXIBLE FLAT (17 CORE)			
		< IC >			
IC801	6-805-894-01	IC MB90803-104			
IC802	6-600-349-21	IC NJL23H400A			
IC803	8-759-713-61	IC PST3429UL			
		< JUMPER RESISTOR >			
JR701	1-216-864-11	SHORT CHIP	0		
JR708	1-216-864-11	SHORT CHIP	0		
JR709	1-216-864-11	SHORT CHIP	0		
JR710	1-216-864-11	SHORT CHIP	0		
JR711	1-216-864-11	SHORT CHIP	0		
JR712	1-216-864-11	SHORT CHIP	0		
JR713	1-216-864-11	SHORT CHIP	0		
JR714	1-216-864-11	SHORT CHIP	0		
JR715	1-216-864-11	SHORT CHIP	0		
JR716	1-216-864-11	SHORT CHIP	0		
JR717	1-216-864-11	SHORT CHIP	0		
JR718	1-216-864-11	SHORT CHIP	0		
JR719	1-216-864-11	SHORT CHIP	0		
JR720	1-216-864-11	SHORT CHIP	0		
		< LIQUID CRYSTAL DISPLAY >			
LCD801	1-805-783-11	DISPLAY PANEL, LIQUID CRYSTAL			
		< TRANSISTOR >			
Q801	8-729-120-28	TRANSISTOR	2SC1623-L5L6		
Q802	8-729-037-13	TRANSISTOR	KTA1271Y		
Q803	8-729-027-43	TRANSISTOR	DTC114EKA-T146		
Q804	8-729-037-13	TRANSISTOR	KTA1271Y		
Q805	8-729-027-43	TRANSISTOR	DTC114EKA-T146		
Q807	8-729-120-28	TRANSISTOR	2SC1623-L5L6		
Q808	8-729-120-28	TRANSISTOR	2SC1623-L5L6		
		< RESISTOR >			
R701	1-216-821-11	METAL CHIP	1K	5%	1/10W
R702	1-216-821-11	METAL CHIP	1K	5%	1/10W
R703	1-216-821-11	METAL CHIP	1K	5%	1/10W
R704	1-216-821-11	METAL CHIP	1K	5%	1/10W
R707	1-216-845-11	METAL CHIP	100K	5%	1/10W

PANEL

Ref. No.	Part No.	Description			Remark
R708	1-216-825-11	METAL CHIP	2.2K	5%	1/10W
			(NEZ3: AEP, UK, EE, RU/NEZ5)		
R709	1-216-833-11	METAL CHIP	10K	5%	1/10W
			(NEZ3: US, CND/NEZ5)		
R710	1-216-821-11	METAL CHIP	1K	5%	1/10W
R711	1-216-817-11	METAL CHIP	470	5%	1/10W
R712	1-216-821-11	METAL CHIP	1K	5%	1/10W
R713	1-216-821-11	METAL CHIP	1K	5%	1/10W
R715	1-216-864-11	SHORT CHIP	0		
R716	1-216-864-11	SHORT CHIP	0		
R721	1-216-864-11	SHORT CHIP	0		
R722	1-216-813-11	METAL CHIP	220	5%	1/10W
R724	1-216-864-11	SHORT CHIP	0		
R725	1-216-821-11	METAL CHIP	1K	5%	1/10W
R726	1-216-821-11	METAL CHIP	1K	5%	1/10W
R803	1-216-809-11	METAL CHIP	100	5%	1/10W
R804	1-216-809-11	METAL CHIP	100	5%	1/10W
R805	1-216-829-11	METAL CHIP	4.7K	5%	1/10W
R806	1-216-821-11	METAL CHIP	1K	5%	1/10W
R807	1-216-809-11	METAL CHIP	100	5%	1/10W
R808	1-216-809-11	METAL CHIP	100	5%	1/10W
R810	1-216-809-11	METAL CHIP	100	5%	1/10W
R811	1-216-809-11	METAL CHIP	100	5%	1/10W
R812	1-216-809-11	METAL CHIP	100	5%	1/10W
R813	1-216-809-11	METAL CHIP	100	5%	1/10W
R814	1-216-809-11	METAL CHIP	100	5%	1/10W
R815	1-216-821-11	METAL CHIP	1K	5%	1/10W
R816	1-216-809-11	METAL CHIP	100	5%	1/10W
R817	1-216-841-11	METAL CHIP	47K	5%	1/10W
R818	1-216-849-11	METAL CHIP	220K	5%	1/10W
R819	1-216-833-11	METAL CHIP	10K	5%	1/10W
R820	1-216-845-11	METAL CHIP	100K	5%	1/10W
R821	1-216-833-11	METAL CHIP	10K	5%	1/10W
R822	1-216-809-11	METAL CHIP	100	5%	1/10W
R824	1-216-809-11	METAL CHIP	100	5%	1/10W
R825	1-216-809-11	METAL CHIP	100	5%	1/10W
R826	1-216-809-11	METAL CHIP	100	5%	1/10W
R827	1-216-809-11	METAL CHIP	100	5%	1/10W
R828	1-216-809-11	METAL CHIP	100	5%	1/10W
R829	1-216-833-11	METAL CHIP	10K	5%	1/10W
R830	1-216-829-11	METAL CHIP	4.7K	5%	1/10W
R831	1-216-845-11	METAL CHIP	100K	5%	1/10W
R832	1-216-809-11	METAL CHIP	100	5%	1/10W
R833	1-216-809-11	METAL CHIP	100	5%	1/10W
R835	1-216-809-11	METAL CHIP	100	5%	1/10W
R836	1-216-809-11	METAL CHIP	100	5%	1/10W
R837	1-216-809-11	METAL CHIP	100	5%	1/10W
R839	1-216-809-11	METAL CHIP	100	5%	1/10W
R840	1-216-833-11	METAL CHIP	10K	5%	1/10W
R841	1-216-821-11	METAL CHIP	1K	5%	1/10W
R842	1-216-833-11	METAL CHIP	10K	5%	1/10W
R843	1-216-833-11	METAL CHIP	10K	5%	1/10W
R844	1-216-837-11	METAL CHIP	22K	5%	1/10W
R845	1-216-833-11	METAL CHIP	10K	5%	1/10W
R846	1-216-829-11	METAL CHIP	4.7K	5%	1/10W
R847	1-216-829-11	METAL CHIP	4.7K	5%	1/10W
R848	1-216-829-11	METAL CHIP	4.7K	5%	1/10W
R849	1-216-829-11	METAL CHIP	4.7K	5%	1/10W
R850	1-216-821-11	METAL CHIP	1K	5%	1/10W
R851	1-216-825-11	METAL CHIP	2.2K	5%	1/10W
R852	1-216-821-11	METAL CHIP	1K	5%	1/10W
R853	1-216-825-11	METAL CHIP	2.2K	5%	1/10W
R854	1-216-864-11	SHORT CHIP	0		
R856	1-216-853-11	METAL CHIP	470K	5%	1/10W
R857	1-216-833-11	METAL CHIP	10K	5%	1/10W
R858	1-216-833-11	METAL CHIP	10K	5%	1/10W
R859	1-216-841-11	METAL CHIP	47K	5%	1/10W
R860	1-216-841-11	METAL CHIP	47K	5%	1/10W
R861	1-216-837-11	METAL CHIP	22K	5%	1/10W
R862	1-216-809-11	METAL CHIP	100	5%	1/10W
R863	1-216-809-11	METAL CHIP	100	5%	1/10W
R868	1-216-841-11	METAL CHIP	47K	5%	1/10W
R869	1-216-833-11	METAL CHIP	10K	5%	1/10W
R870	1-216-864-11	SHORT CHIP	0		
R871	1-216-833-11	METAL CHIP	10K	5%	1/10W
R872	1-216-821-11	METAL CHIP	1K	5%	1/10W
R873	1-216-825-11	METAL CHIP	2.2K	5%	1/10W
R874	1-216-825-11	METAL CHIP	2.2K	5%	1/10W
R875	1-216-829-11	METAL CHIP	4.7K	5%	1/10W
R876	1-216-829-11	METAL CHIP	4.7K	5%	1/10W
			(NEZ3: AEP, UK, EE, RU/NEZ5)		
R877	1-216-833-11	METAL CHIP	10K	5%	1/10W
			(NEZ3: AEP, UK, EE, RU/NEZ5)		
R878	1-216-833-11	METAL CHIP	10K	5%	1/10W
R879	1-216-821-11	METAL CHIP	1K	5%	1/10W
R880	1-216-825-11	METAL CHIP	2.2K	5%	1/10W
R881	1-216-825-11	METAL CHIP	2.2K	5%	1/10W
R882	1-216-829-11	METAL CHIP	4.7K	5%	1/10W
R883	1-216-829-11	METAL CHIP	4.7K	5%	1/10W
R884	1-216-825-11	METAL CHIP	2.2K	5%	1/10W
R885	1-216-825-11	METAL CHIP	2.2K	5%	1/10W
R886	1-216-864-11	SHORT CHIP	0		
		< VARIABLE RESISTOR >			
RV801	1-479-195-11	ENCODER (VOLUME)			
		< SWITCH >			
S801	1-786-050-21	SWITCH, KEY BOARD (I/⏻)			
S802	1-786-050-21	SWITCH, KEY BOARD (DSGX)			
S803	1-786-050-21	SWITCH, KEY BOARD (CD SYNC)			
S804	1-786-050-21	SWITCH, KEY BOARD (● PAUSE/START)			
S805	1-786-050-21	SWITCH, KEY BOARD (PLAY MODE/TUNING MODE)			
S806	1-786-050-21	SWITCH, KEY BOARD (🗀+) (NEZ3: AEP, UK, EE, RU/NEZ5)			
S807	1-786-050-21	SWITCH, KEY BOARD (🗀–) (NEZ3: AEP, UK, EE, RU/NEZ5)			
S808	1-786-050-21	SWITCH, KEY BOARD (TAPE ►)			
S809	1-786-050-21	SWITCH, KEY BOARD (CD ►II)			
S810	1-786-050-21	SWITCH, KEY BOARD (TUNER/BAND)			
S811	1-786-050-21	SWITCH, KEY BOARD (■)			
S812	1-786-050-21	SWITCH, KEY BOARD (TUNING –, I◁◁ ◄◄)			
S813	1-786-050-21	SWITCH, KEY BOARD (TUNING +, ►► ▷▷I)			
		< VIBRATOR >			
X801	1-579-463-11	VIBRATOR, CRYSTAL (32.768kHz)			

PANEL SHIELD

Ref. No.	Part No.	Description	Remark
X802	1-795-054-61	VIBRATOR, CERAMIC (10MHz)	
**********			
	A-1139-356-A	SHIELD BOARD, COMPLETE (NEZ3: US, CND)	
		**********	
**********			
		MISCELLANEOUS	
		**********	
55	1-796-352-71	DECK, MECHANICAL (CMAL5Z231)	
152	1-452-899-11	MAGNET	
⚠160	8-820-126-01	OPTICAL PICK-UP BLOCK	(KSM-213CDP/C2NP) (Including spindle motor (M401), sled motor (M402))
163	1-827-992-11	WIRE (FLAT TYPE) (16 CORE)	
164	1-783-140-11	WIRE (FLAT TYPE) (23 CORE)	
205	1-693-625-11	TUNER UNIT (FM/AM) (NEZ3: US, CND)	
205	1-693-626-11	TUNER UNIT (FM/AM) (NEZ5)	
205	1-693-629-11	TUNER UNIT (FM/AM) (NEZ3: AEP, UK, EE, RU)	
206	1-769-946-11	WIRE (FLAT TYPE) (11 CORE) (NEZ3)	
206	1-773-011-11	WIRE (FLAT TYPE) (15 CORE) (NEZ5)	
⚠208	1-769-744-81	CORD, POWER (UK)	
⚠208	1-830-188-11	CORD, POWER (AEP, EE, RU)	
⚠208	1-830-190-11	CORD, POWER (US, CND)	
M301	1-787-103-11	FAN, DC (NEZ5)	
S201	1-771-853-11	SWITCH, DETECTION (LIMIT)	
S820	1-692-960-21	SWITCH, PUSH (1 KEY)	(CD LID OPEN/CLOSE DETECT)
⚠T902	1-443-566-11	TRANSFORMER, POWER (NEZ5)	
⚠T902	1-443-573-11	TRANSFORMER, POWER	(NEZ3: AEP, UK, EE, RU)
⚠T902	1-443-626-11	TRANSFORMER, POWER (NEZ3: US, CND)	
**********			
		ACCESSORIES	
		**********	
⚠	1-770-019-61	ADAPTOR, CONVERSION PLUG	(NEZ3: UK/NEZ5: UK)

REVISION HISTORY

Clicking the version allows you to jump to the revised page.
Also, clicking the version at the upper right on the revised page allows you to jump to the next revised page.

Ver.	Date	Description of Revision
1.0	2005.03	New
1.1	2005.08	Change of Base Unit (BU-K7BD81D-G → BU-K7BD81D2) Change of Part No. for CD board Change of Part No. for Ref. No. C320, R204 on CD board (ECN-ECA96382)
1.2	2005.09	Change of specifications (SUPPLEMENT-1) NEZ3: US, Canadian, AEP, UK, East European, Russian models only NEZ5: AEP, UK, East European, Russian models only (ENG-05007)
1.3	2005.11	Addition of Method to Distinguished by Serial No. (ENG-05015)

SS-CNEZ3/CNEZ5

SERVICE MANUAL

Ver. 1.0 2005.03

US Model
Australian Model
SS-CNEZ3
Canadian Model
AEP Model
UK Model
E Model
SS-CNEZ3/CNEZ5

- SS-CNEZ3 is the speaker system in CMT-NEZ3.
- SS-CNEZ5 is the speaker system in CMT-NEZ5.

Photo: SS-CNEZ3

Photo: SS-CNEZ5

SPECIFICATIONS

SS-CNEZ5

Speaker system	2-way, bass-reflex type
Speaker units	
Woofer:	10 cm dia., cone type
Tweeter:	4 cm dia., cone type
Nominal impedance	6 ohms
Dimensions (w/h/d)	Approx. 145 × 235 × 175 mm
Mass	Approx. 1.9 kg net per speaker

SS-CNEZ3

Speaker system	Full Range Speaker System
Speaker units	
Woofer:	
North American model:	8 cm dia., cone type
Other models:	10 cm dia., cone type
Nominal impedance	6 ohms
Dimensions (w/h/d)	Approx. 145 × 235 × 155 mm
Mass	
North American model:	Approx. 1.4 kg net per speaker
Other models:	Approx. 1.5 kg net per speaker

Design and specifications are subject to change without notice.

ACCESSORIES

Ref. No.	Part No.	Description	Remark
1	A-1090-980-A	OVERALL ASSY	(SS-CNEZ3:AEP, EE, RU, UK, MX, E, EA, SP, TW, KR, AUS)
1	A-1097-669-A	OVERALL ASSY	(SS-CNEZ3:US, CND, AR, E51)
2	A-1091-096-A	SYSTEM (ASSY) (for SILVER)	(SS-CNEZ5)
2	A-1097-667-A	SYSTEM (ASSY) (for WHITE)	(SS-CNEZ5)
3	X-2048-416-1	FRAME (ASSY), GRILLE (for SILVER)	(SS-CNEZ5)
3	X-2048-942-1	FRAME (ASSY), GRILLE (for WHITE)	(SS-CNEZ5)

- Abbreviation

AR	: Argentina model	KR	: Korean model
AUS	: Australian model	MX	: Mexican model
CND	: Canadian model	RU	: Russian model
E51	: Chirean and Peruvian models	SP	: Singapore model
EA	: Saudi Arabia model	TW	: Taiwan model
EE	: East European model		

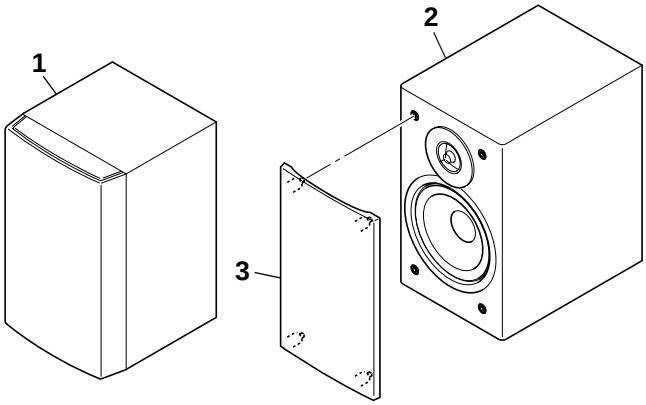

– SS-CNEZ3 – *– SS-CNEZ5 –*

SPEAKER SYSTEM

9-879-529-01
2005C05-1
© 2005.03

Sony Corporation
Personal Audio Group
Published by Sony Engineering Corporation

SONY®

REVISION HISTORY

Clicking the version allows you to jump to the revised page.
Also, clicking the version at the upper right on the revised page allows you to jump to the next revised page.

Ver.	Date	Description of Revision
1.0	2005.03	New